12–7. Refer to the sketch for Prob. 12–3. Determine the reaction R and centroidal displacements at $x_1 = L/2$ due to a concentrated force $P\bar{i}_2$ applied to the web at $x_1 = L/2$. Employ the force method.

12–8. Refer to Example 12–7. Assuming Equation (h) is solved for Z_1, discuss how you would determine the translation u_2 at $x_1 = L/2$.

12–9. Consider the four-span beam shown. Assume linearly elastic behavior, the shear center coincides with the centroid, and planar loading.

(a) Compare the following choices for the force redundants with respect to computational effort:
   1. reactions at the interior supports
   2. bending moments at the interior supports

(b) Discuss how you would employ Maxwell's law of reciprocal deflections to generate influence lines for the redundants due to a concentrated force moving from left to right.

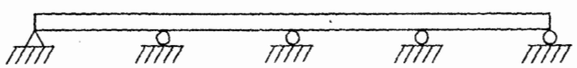

Prob. 12–9

12–10. Consider a linearly elastic member fixed at both ends and subjected to a temperature increase

$$T = a_1 + a_2x_2 + a_3x_3$$

Determine the end actions and displacements (translations and rotations) at mid-span.

12–11. Consider a linearly elastic member fixed at the left end (A) and subjected to forces acting at the right end (B) and support movement at A. Determine the expressions for the displacements at B in terms of the support movement at A and end forces at B with the force method. Compare this approach with that followed in Example 12–2.

13

Restrained Torsion-Flexure of a Prismatic Member

13–1. INTRODUCTION

The engineering theory of prismatic members developed in Chapter 12 is based on the assumption that the effect of variable warping of the cross section on the normal and shearing stresses is negligible, i.e., the stress distributions predicted by the St. Venant theory, which is valid only for constant warping and no warping restraint at the ends, are used. We also assume the cross section is rigid with respect to in-plane deformation. This leads to the result that the cross section *twists* about the *shear center*, a fixed point in the cross section. Torsion and flexure are *uncoupled* when one works with the torsional moment about the shear center rather than the centroid. The complete set of governing equations for the engineering theory are summarized in Sec. 12–4.

Variable warping or warping restraint at the ends of the member leads to additional normal and shearing stresses. Since the St. Venant normal stress distribution satisfies the definition equations for F_1, M_2, M_3 identically, the additional normal stress, σ^r, must be statically equivalent to zero, i.e., it must satisfy

$$\iint \sigma^r_{11}\, dA = \iint x_2\sigma^r_{11}\, dA = \iint x_3\sigma^r_{11}\, dA = 0 \qquad (13\text{–}1)$$

The St. Venant flexural shear flow distribution is obtained by applying the engineering theory developed in Sec. 11–7. This distribution is statically equivalent to F_2, F_3 acting at the shear center. It follows that the additional shear stresses, σ^r_{12} and σ^r_{13}, due to warping restraint must be statically equivalent to only a torsional moment:

$$\iint \sigma^r_{12}\, dA = 0$$
$$\iint \sigma^r_{13}\, dA = 0 \qquad (13\text{–}2)$$

To account for warping restraint, one must modify the torsion relations. We will still assume the cross section is rigid with respect to in-plane deformation.

In what follows, we develop the governing equations for restrained torsion. We start by introducing displacement expansions and apply the principle of virtual displacements to establish the force parameters and force-equilibrium equations for the geometrically linear case. We discuss next two procedures for establishing the force-displacement relations. The first method is a pure-displacement approach, i.e., it takes the stresses as determined from the strain (displacement) expansions. The second method is similar to what we employed for the engineering theory. We introduce expansions for the stresses in terms of the force parameters and apply the principle of virtual forces. This corresponds to a mixed formulation, since we are actually working with expansions for both displacements and stresses. Solutions of the governing equations for the linear mixed formulation are obtained and applied to thin-walled open and closed cross sections. Finally, we derive the governing equations for geomettrically nonlinear restrained torsion.

13–2. DISPLACEMENT EXPANSIONS; EQUILIBRIUM EQUATIONS

The principle of virtual displacements† states that

$$\iiint \boldsymbol{\sigma}^T \, \delta\boldsymbol{\varepsilon} \, d(\text{vol.}) = \iiint \mathbf{b}^T \, \Delta\mathbf{u} \, d(\text{vol.}) + \iint \mathbf{p}^T \, \Delta\mathbf{u} \, d(\text{surface area}) \qquad \text{(a)}$$

is identically satisfied for *arbitrary* displacement, $\Delta\mathbf{u}$, when the stresses ($\boldsymbol{\sigma}$) are in equilibrium with the applied body ($\mathbf{b}$) and surface ($\mathbf{p}$) forces. We obtain a system of one-dimensional force-equilibrium equations by introducing expansions for the displacements over the cross section in terms of one-dimensional displacement parameters. This leads to force quantities consistent with the displacement parameters chosen.

We use the same notation as in Chapters 11, 12. The X_1 axis coincides with the centroid; X_2, X_3 are principal inertia axes; and $\bar{x}_2$, $\bar{x}_3$ are the coordinates of the shear center. We assume the cross section is rigid with respect to in-plane deformation, work with the translations of the *shear center*, and take the displacement expansions (see Fig. 13–1) as

$$\begin{aligned} \hat{u}_1 &= u_1 + \omega_2 x_3 - \omega_3 x_2 + f\phi \\ \hat{u}_2 &= u_{s2} - \omega_1(x_3 - \bar{x}_3) \\ \hat{u}_3 &= u_{s3} + \omega_1(x_2 - \bar{x}_2) \end{aligned} \qquad (13\text{–}3)$$

where ϕ is a prescribed function of x_2, x_3, and—

1. u_1, u_{s2}, u_{s3} are the rigid body translations of the cross section.
2. ω_1, ω_2, ω_3 are the rigid body rotations of the cross section about the shear center and the X_2, X_3 axes.
3. f is a parameter definining the warping of the cross section. The variation over the cross section is defined by ϕ.

Note that all seven parameters are functions *only* of x_1. For pure torsion

† See Sec. 10–6.

(i.e., the St. Venant theory developed in Chapter 11), one sets $f = \omega_{1,1} = \text{const}$ and $\phi = \phi_t$. For unrestrained variable torsion (i.e., the engineering theory developed in Chapter 12), one sets $f = 0$. Since there are seven displacement parameters, application of the principle of virtual displacements will result in seven equilibrium equations.

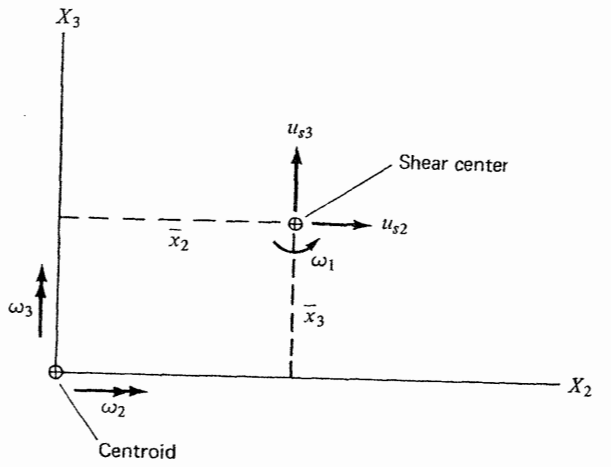

Fig. 13–1. Notation for displacement measures.

The strain expansions† corresponding to (13–3) are

$$\begin{aligned} \varepsilon_1 &= u_{1,1} + \omega_{2,1} x_3 - \omega_{3,1} x_2 + f_{,1}\phi \\ \varepsilon_2 &= \varepsilon_3 = \gamma_{23} = 0 \\ \gamma_{12} &= u_{s2,1} - \omega_3 - \omega_{1,1}(x_3 - \bar{x}_3) + f\phi_{,2} \\ \gamma_{13} &= u_{s3,1} + \omega_2 + \omega_{1,1}(x_2 - \bar{x}_2) + f\phi_{,3} \end{aligned} \qquad (13\text{–}4)$$

Using (13–4), the left-hand side of (a) expands to

$$\begin{aligned} \iiint \boldsymbol{\sigma}^T \, \delta\boldsymbol{\varepsilon} \, d(\text{vol.}) = \int_{x_1} [& F_1 \, \Delta u_{1,1} + F_2(\Delta u_{s2,1} - \Delta\omega_3) \\ & + F_3(\Delta u_{s3,1} + \Delta\omega_2) + M_2 \, \Delta\omega_{2,1} + M_3 \, \Delta\omega_{3,1} \\ & + M_T \, \Delta\omega_{1,1} + M_\phi \, \Delta f_{,1} + M_R \, \Delta f] dx_1 \end{aligned} \qquad \text{(b)}$$

where the two additional force parameters are defined by

$$\begin{aligned} M_\phi &= \iint \sigma_{11}\phi \, dA \\ M_R &= \iint (\sigma_{12}\phi_{,2} + \sigma_{13}\phi_{,3}) dA \end{aligned} \qquad (13\text{–}5)$$

Note that M_ϕ has units of (force) (length)^2 and M_R has units of moment. The quantity M_ϕ is called the *bimoment*.

† This derivation is restricted to linear geometry. The nonlinear strain expansions are derived in Sec. 13–9.

To reduce the right-hand side of (a), we refer the transverse loading to the shear center. The additional load terms are

$$\begin{aligned} m_\phi &= \oint p_1 \phi \, dS = \text{distributed bimoment} \\ \bar{M}_\phi &= \iint p_1 \phi \, dA = \text{external bimoment at an end section } (x_1 = 0, L) \end{aligned} \tag{13-6}$$

Then

$$\begin{aligned} &\iiint \mathbf{b}^T \Delta\mathbf{u} \, d(\text{vol.}) + \iint \mathbf{p}^T \Delta\mathbf{u} \, d(\text{surface area}) \\ &\quad = \int_{x_1} [b_1 \Delta u_1 + b_2 \Delta u_{s2} + b_3 \Delta u_{s3} + m_T \Delta\omega_1 + m_2 \Delta\omega_2 \\ &\qquad + m_3 \Delta\omega_3 + m_\phi \Delta f] dx_1 + |\bar{F}_1 \Delta u_1 + \bar{F}_2 \Delta u_{s2} \\ &\qquad + \bar{F}_3 \Delta u_{s3} + \bar{M}_T \Delta\omega_1 + \bar{M}_2 \Delta\omega_2 + \bar{M}_3 \Delta\omega_3 + \bar{M}_\phi \Delta f|_{x_1 = 0, L} \end{aligned} \tag{c}$$

The definitions of b_j, m_j, m_T, $\bar{F}_j$, $\bar{M}_j$, $\bar{M}_T$ are the same as for the engineering theory.

Finally, we equate (b), (c) and require the relation to be satisfied for arbitrary variations of the displacement parameters. This step involves first integrating (b) by parts to eliminate the derivatives and then equating the coefficients of the displacement parameters. The resulting equilibrium equations and boundary conditions are as follows:

Equilibrium Equations

$$\begin{aligned} F_{1,1} + b_1 &= 0 \\ F_{2,1} + b_2 &= 0 \\ F_{3,1} + b_3 &= 0 \\ M_{T,1} + m_T &= 0 \\ M_{2,1} - F_3 + m_2 &= 0 \\ M_{3,1} + F_2 + m_3 &= 0 \\ M_{\phi,1} - M_R + m_\phi &= 0 \end{aligned}$$

Boundary Conditions at $x_1 = 0$ (13-7)

$$\begin{aligned} u_1 &= \bar{u}_1 & \text{or} \quad F_1 &= -\bar{F}_1 \\ u_{s2} &= \bar{u}_{s2} & \text{or} \quad F_2 &= -\bar{F}_2 \\ u_{s3} &= \bar{u}_{s3} & \text{or} \quad F_3 &= -\bar{F}_3 \\ \omega_1 &= \bar{\omega}_1 & \text{or} \quad M_T &= -\bar{M}_T \\ \omega_2 &= \bar{\omega}_2 & \text{or} \quad M_2 &= -\bar{M}_2 \\ \omega_3 &= \bar{\omega}_3 & \text{or} \quad M_3 &= -\bar{M}_3 \\ f &= \bar{f} & \text{or} \quad M_\phi &= -\bar{M}_\phi \end{aligned}$$

Boundary Conditions at $x_1 = L$

These are the same as for $x_1 = 0$ with the minus sign replaced with a plus sign. For example:

$$f = \bar{f} \quad \text{or} \quad M_\phi = +\bar{M}_\phi$$

We recognize the first six equations as the governing equations for the engineering theory. The additional equation,

$$\begin{aligned} M_{\phi,1} - M_R + m_\phi &= 0 & 0 < x_1 < L \\ f = \bar{f} \quad \text{or} \quad M_\phi &= \mp \bar{M}_\phi & x_1 = 0, L \end{aligned} \tag{d}$$

is due to warping restraint. Also, we see that one specifies either f or the bimoment at the ends of the member. The condition $f = \bar{f}$ applies when the end cross section is restrained with respect to warping. If the end cross section is free to warp, the boundary condition is $M_\phi = \pm M_\phi$ (+ for $x_1 = L$).

To interpret the equation relating M_R and the bimoment, we consider the definition for M_R,

$$M_R = \iint (\sigma_{12}\phi_{,2} + \sigma_{13}\phi_{,3}) dA \tag{e}$$

Integrating (e) by parts leads to

$$M_R = \oint p_1 \phi \, dS - \iint \phi(\sigma_{12,2} + \sigma_{13,3}) dA \tag{f}$$

Utilizing the axial stress equilibrium equation,

$$\sigma_{12,2} + \sigma_{13,3} + \sigma_{11,1} = 0 \tag{g}$$

we can write

$$\begin{aligned} M_R &= \oint p_1 \phi \, dS + \iint \phi \sigma_{11,1} \, dA \\ &= m_\phi + M_{\phi,1} \end{aligned} \tag{h}$$

We see that (h) corresponds to the axial equilibrium equations weighted with respect to ϕ,

$$\begin{gathered} \iint (\sigma_{12,2} + \sigma_{13,3} + \sigma_{11,1}) \phi \, dA + \oint (p_1 - \alpha_{n2}\sigma_{12} - \alpha_{n3}\sigma_{13}) \phi \, dS = 0 \\ \Downarrow \\ M_{\phi,1} + m_\phi - M_R = 0 \end{gathered} \tag{i}$$

In most cases, there is no surface loading on S, i.e., $p_1 = 0$ on the cylindrical boundary. We will discuss the determination of stresses in a later section. We simply point out here that M_R involves only the *additional* shear stresses due to warping restraint since the St. Venant shearing stresses correspond to $\sigma_{11} = 0$.†

13-3. FORCE-DISPLACEMENT RELATIONS—DISPLACEMENT MODEL

To establish the relation between force parameters and the displacement parameters, we consider (13-4) to define the actual (as well as virtual) strain distribution and apply the stress-strain relations. We also consider the material to be isotropic and suppose there is no initial strain. The stress expansions are

$$\begin{aligned} \sigma_{11} &= E_{\text{eff}}\varepsilon_1 = E_{\text{eff}}[u_{1,1} + x_3\omega_{2,1} - x_2\omega_{3,1} + f_{,1}\phi] \\ \sigma_{12} &= G\gamma_{12} = G[u_{s2,1} - \omega_3 - \omega_{1,1}(x_3 - \bar{x}_3) + f\phi_{,2}] \\ \sigma_{13} &= G\gamma_{13} = G[u_{s3,1} + \omega_2 + \omega_{1,1}(x_2 - \bar{x}_2) + f\phi_{,3}] \end{aligned} \tag{13-8}$$

† $M_R = M_\phi = 0$ for St. Venant (pure) torsion. We neglect M_R and M_ϕ for unrestrained variable torsion.

where E_{eff} denotes the effective modulus. Although our displacement expansions correspond to plane strain ($\varepsilon_2 = \varepsilon_3 = 0$), the in-plane stresses vanish on the boundary. Therefore, it seems more reasonable to use the extensional stress-strain relations for plane stress. In what follows, we will take E_{eff} = Young's modulus, E.

Consider the expression for σ_{11}. The term involving ϕ is due to warping of the cross section. This additional stress must satisfy (13–1), which, in turn, requires ϕ to satisfy the following orthogonality conditions:†

$$\iint \phi \, dA = \iint x_2 \phi \, dA = \iint x_3 \phi \, dA = 0 \tag{13–9}$$

Assuming (13–9) is satisfied, and noting that X_2, X_3 are principal centroidal axes, the expressions for F_1, M_2, M_3, and the M_ϕ reduce to:

$$\begin{aligned} F_1 &= EAu_{1,1} \\ M_2 &= EI_2\omega_{2,1} \\ M_3 &= EI_3\omega_{3,1} \\ M_\phi &= E_r I_\phi f_{,1} \end{aligned} \tag{13–10}$$

where

$$I_\phi = \iint \phi^2 \, dA$$

We have included the subscript r on E to keep track of the normal stress due to warping restraint. Inverting (13–10) and then substituting in the expression for σ_{11} lead to

$$\sigma_{11} = \frac{F_1}{A} + \frac{M_2}{I_2} x_3 - \frac{M_3}{I_3} x_2 + \frac{M_\phi}{I_\phi} \phi \tag{13–11}$$

The expressions for F_2, F_3, M_T, and M_R expand to

$$\begin{aligned} \frac{1}{G} F_2 &= A(u_{s2,1} - \omega_3 + \bar{x}_3\omega_{1,1}) + fS_2 \\ \frac{1}{G} F_3 &= A(u_{s3,1} + \omega_2 - \bar{x}_2\omega_{1,1}) + fS_3 \\ \frac{1}{G} M_1 &= I_1\omega_{1,1} + fI'_\phi \\ M_T &= M_1 + \bar{x}_3 F_2 - \bar{x}_2 F_3 \\ \frac{1}{G} M_R &= \frac{S_2}{GA} F_2 + \frac{S_3}{GA} F_3 + I'_\phi \omega_{1,1} + I''_\phi f \end{aligned} \tag{13–12}$$

where

$$\begin{aligned} S_j &= \iint \phi_{,j} \, dA \\ I_1 &= \text{polar moment of inertia} = I_2 + I_3 \\ I'_\phi &= \iint (x_2\phi_{,3} - x_3\phi_{,2}) dA \\ I''_\phi &= \iint (\phi_{,2}^2 + \phi_{,3}^2) dA - \frac{1}{A}(S_2^2 + S_3^2) \end{aligned}$$

† $F_1 = M_2 = M_3 = 0$ for σ_{11} due to warping restraint.

Also, the expressions for the shearing stresses can be written as

$$\begin{aligned} \sigma_{12} &= \frac{F_2}{A} + G\left[-x_3\omega_{1,1} + f\left(\phi_{,2} - \frac{S_2}{A}\right)\right] \\ \sigma_{13} &= \frac{F_3}{A} + G\left[x_2\omega_{1,1} + f\left(\phi_{,3} - \frac{S_3}{A}\right)\right] \end{aligned} \tag{13–13}$$

The essential step is the selection of ϕ which, to this point, must satisfy only the orthogonality conditions (13–9). To gain some insight as to a suitable form for ϕ, let us reexamine the St. Venant theory of unrestrained torsion. We suppose the section twists about an arbitrary point (x'_2, x'_3), instead of about the centroid as in Sec. 11–2. The displacement expansions are

$$\begin{aligned} \hat{u}_2 &= -\omega_1(x_3 - x'_3) \qquad \hat{u}_3 = \omega_1(x_2 - x'_2) \\ \hat{u}_1 &= \omega_{1,1}\phi'_t \end{aligned} \tag{a}$$

where $\omega_{1,1} = M_1/GJ$ = const. Operating on (a) leads to

$$\begin{aligned} \sigma_{11} &= 0 \\ \sigma_{12} &= \frac{M_1}{J}[\phi'_{t,2} - (x_3 - x'_3)] \\ \sigma_{13} &= \frac{M_1}{J}[\phi'_{t,3} + (x_2 - x'_2)] \end{aligned} \tag{b}$$

The equation and boundary condition for ϕ'_t follow from the axial equilibrium equation and boundary condition,

$$\begin{aligned} \nabla^2\phi'_t &= 0 \qquad \text{in } A \\ \frac{\partial\phi'_t}{\partial n} &= \alpha_{n2}(x_3 - x'_3) - \alpha_{n3}(x_2 - x'_2) \qquad \text{on } S \end{aligned} \tag{c}$$

We can express ϕ'_t as

$$\phi'_t = C - x'_3x_2 + x'_2x_3 + \phi_t \tag{d}$$

where C is also an arbitrary constant. The boundary condition and expressions for the stresses become

$$\begin{aligned} \frac{\partial\phi_t}{\partial n} &= \alpha_{n2}x_3 - \alpha_{n3}x_2 \\ \sigma_{12} &= \frac{M_1}{J}(\phi_{t,2} - x_3) \\ \sigma_{13} &= \frac{M_1}{J}(\phi_{t,3} + x_2) \end{aligned} \tag{e}$$

Since ϕ_t depends only on the cross section, it follows that the stress distribution

and torsional constant are *independent* of the center of twist. Also, one can show† that

$$\begin{aligned} \iint \phi_{t,2}\, dA &= \iint \phi_{t,3}\, dA = 0 \\ -\iint (x_2\phi_{t,3} - x_3\phi_{t,2}) dA &= \iint [(\phi_{t,2})^2 + (\phi_{t,3})^2] dA \end{aligned} \tag{f}$$

Suppose we take $\phi = \phi_t'$. The constants (C, x_2', x_3') are evaluated by requiring ϕ_t' to satisfy (13–9), and we obtain

$$\begin{aligned} C &= -\frac{1}{A} \iint \phi_t\, dA \\ x_2' &= -\frac{1}{I_2} \iint x_3 \phi_t\, dA \\ x_3' &= \frac{1}{I_3} \iint x_2 \phi_t\, dA \end{aligned} \tag{g}$$

Now, one can show‡ that the equations for x_2', x_3' are *identical* to the equations for the coordinates of the shear center when the cross section is considered to be rigid with respect to in-plane deformation. That is, the warping function for unrestrained torsion about the shear center is orthogonal with respect to $1, x_2, x_3$.

Summarizing, we have shown that

$$\phi = C - \bar{x}_3 x_2 + \bar{x}_2 x_3 + \phi_t = \phi_t^{sc} \tag{13–14}$$

is a permissible warping function. The cross-sectional properties and force-displacement relations corresponding to this choice for ϕ are listed below:

Cross-Sectional Properties

$$\begin{aligned} S_2 &= -\bar{x}_3 A \qquad S_3 = +\bar{x}_2 A \\ I_\phi' &= -I_\phi'' \\ J &= I_1 + I_\phi' = I_1 - I_\phi'' \\ I_\phi'' &= \iint [(\phi_{t,2})^2 + (\phi_{t,3})^2] dA \end{aligned} \tag{13–15}$$

Shear Stresses

$$\begin{aligned} \sigma_{12} &= \frac{F_2}{A} + G(-x_3\omega_{1,1} + f\phi_{t,2}) \\ \sigma_{13} &= \frac{F_3}{A} + G(x_2\omega_{1,1} + f\phi_{t,3}) \end{aligned} \tag{13–16}$$

† See Sec. 11–2 and Prob. 11–2.
‡ See Prob. 13–1.

Force-Displacement Relations

$$\begin{aligned} M_T &= GI_1\omega_{1,1} - GI_\phi'' f + \bar{x}_3 F_2 - \bar{x}_2 F_3 \\ M_R &= GI_\phi''(f - \omega_{1,1}) - \bar{x}_3 F_2 + \bar{x}_2 F_3 \\ \frac{F_2}{GA} &= u_{s2,1} - \omega_3 - \bar{x}_3(f - \omega_{1,1}) \\ \frac{F_3}{GA} &= u_{s3,1} + \omega_2 + \bar{x}_2(f - \omega_{1,1}) \end{aligned} \tag{13–17}$$

We introduce the assumption of *negligible restraint* against warping by setting $E_r = 0$. Then, $M_\phi = 0$, and the seventh equilibrium equation reduces to $M_R = 0$. Specializing (13–17) for this case, we obtain

$$\begin{aligned} f - \omega_{1,1} &= \frac{1}{GI_\phi''}(\bar{x}_3 F_2 - \bar{x}_2 F_3) \\ M_T &= GJ\omega_{1,1} \end{aligned} \tag{13–18}$$

and

$$\begin{aligned} u_{s2,1} &= \omega_3 + \frac{F_2}{G}\left(\frac{1}{A} + \frac{\bar{x}_3^2}{I_\phi''}\right) + \frac{F_3}{G}\left(-\frac{\bar{x}_2\bar{x}_3}{I_\phi''}\right) \\ u_{s3,1} &= \omega_2 + \frac{F_2}{G}\left(-\frac{\bar{x}_2\bar{x}_3}{I_\phi''}\right) + \frac{F_3}{G}\left(\frac{1}{A} + \frac{\bar{x}_2^2}{I_\phi''}\right) \end{aligned} \tag{13–19}$$

The shearing stress distributions due to F_2, F_3 do not satisfy the stress boundary condition

$$\alpha_{n2}\sigma_{12} + \alpha_{n3}\sigma_{13} = 0 \qquad \text{on } S \tag{a}$$

However, one can show that they satisfy

$$\oint (\alpha_{n2}\sigma_{12} + \alpha_{n3}\sigma_{13}) dS = 0 \tag{b}$$

for arbitrary F_2, F_3. Equations (13–19) are similar in form to the results obtained in Chapter 12, which were based on shear stress expansions satisfying (a) identically on the boundary.

Finally, we point out that torsion and flexure are *uncoupled* only when warping restraint is neglected ($E_r = 0$). Equations (13–17) show that restrained torsion results in translation of the shear center. We will return to this point in the next section.

13–4. SOLUTION FOR RESTRAINED TORSION—DISPLACEMENT MODEL

To obtain an indication of the effect of warping restraint, we apply the theory developed in the previous section to a cantilever member having a rectangular cross section. (See Fig. 13–2). The left end ($x_1 = 0$) is fixed with

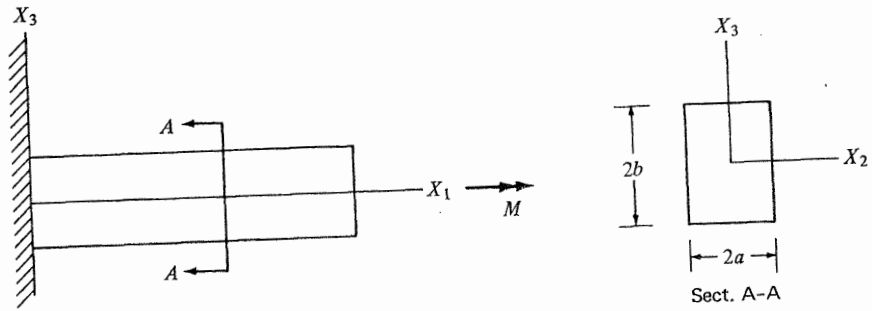

Fig. 13–2. Restrained torsion-cantilever with rectangular cross section.

respect to both rotation and warping while the right end ($x_1 = L$) is free to warp. The boundary conditions are

$$\begin{aligned} x_1 &= 0 & \omega_1 &= f = 0 \\ x_1 &= L & M_1 &= M \\ & & M_\phi &= 0 \end{aligned} \tag{a}$$

For convenience, we list the governing equations for restrained torsion:

Equilibrium Equations ***(See (13–7))***

$$M_{1,1} + m_1 = 0 \tag{b}$$

$$M_R = M_{\phi,1} + m_\phi \tag{c}$$

Force-Displacement Relations (See (13–10) and (13–12). Note that $F_2 = F_3 = 0$)

$$\begin{aligned} M_\phi &= E_r I_\phi f_{,1} \\ M_1 &= G I_1 \omega_{1,1} + G I'_\phi f \\ M_R &= G I'_\phi \omega_{1,1} + G I''_\phi f \end{aligned} \tag{d}$$

Boundary Conditions (for this example)

At $x_1 = 0$,

$$f = \omega_1 = 0 \tag{e}$$

At $x_1 = L$,

$$\begin{aligned} M_1 &= M \\ f_{,1} &= 0 \end{aligned}$$

We start with (b). Integrating (b) and enforcing the boundary condition at $x_1 = L$ leads to

$$M_1 = M \tag{13–20}$$

Next, we combine (c) and (d):

$$G I_1 \omega_{1,1} + G I'_\phi f = M \tag{f}$$

$$G I'_\phi \omega_{1,1} + G I''_\phi f = E_r I_\phi f_{,11} \tag{g}$$

Solving (f) for $\omega_{1,1}$,

$$\omega_{1,1} = \frac{M}{G I_1} - \frac{I'_\phi}{I_1} f \tag{h}$$

and then substituting in (g) lead to

$$f_{,11} - \bar{\lambda}^2 f = \frac{I'_\phi}{E_r I_1 I_\phi} M \tag{i}$$

where $\bar{\lambda}$ is defined as

$$\bar{\lambda}^2 = \frac{G}{E_r I_\phi}\left[I''_\phi - \frac{(I'_\phi)^2}{I_1}\right] \tag{13–21}$$

Note that $\bar{\lambda}^2$ has units of (1/length)^2. The solution of (i) and (h) which satisfies the boundary conditions (e) is (we drop the subscript on x for convenience)

$$\begin{aligned} f &= \frac{M}{GJ'}\{1 - \cosh \bar{\lambda}x + \tanh \bar{\lambda}L \sinh \bar{\lambda}x\} \\ \omega_1 &= \frac{M}{GJ'}\left\{-\frac{I''_\phi}{I'_\phi}x + \frac{I'_\phi}{\bar{\lambda}I_1}[\sinh \bar{\lambda}x + (1 - \cosh \bar{\lambda}x)\tanh \bar{\lambda}L]\right\} \\ J' &= \frac{I_1}{I'_\phi}\left[-I''_\phi + \frac{(I'_\phi)^2}{I_1}\right] \end{aligned} \tag{13–22}$$

The rate of decay of the exponential terms depends on $\bar{\lambda}$. For $\bar{\lambda}L > \approx 2.5$, we can take $\tanh \bar{\lambda}L \approx 1$, and the solution reduces to

$$\begin{aligned} f &= \frac{M}{GJ'}\{1 - e^{-\bar{\lambda}x}\} \\ \omega_1 &= \frac{M}{GJ'}\left\{-\frac{I''_\phi}{I'_\phi}x + \frac{I'_\phi}{\bar{\lambda}I_1}(1 - e^{-\bar{\lambda}x})\right\} \end{aligned} \tag{13–23}$$

As a point of interest, the St. Venant solution is

$$f = \frac{d\omega_1}{dx} = \frac{M}{GJ} \tag{j}$$

We see that $1/\bar{\lambda}$ is a measure of the length, L_b, of the interval in which warping restraint is significant. We refer to L_b as the *characteristic* length or boundary layer. By definition,

$$e^{-\bar{\lambda}L_b} \approx 0 \tag{13–24}$$

In what follows, we shall take

$$L_b \approx \frac{4}{\bar{\lambda}} \tag{13–25}$$

The results obtained show that $\bar{\lambda}$ is the key parameter. Now, $\bar{\lambda}$ depends on the ratio G/E_r and on terms derived from ϕ, the assumed warping function. If

we take $\phi = \phi_t^{sc}$, the warping function† for unrestrained torsion defined by (13–14), the various coefficients are related by

$$\begin{aligned} I'_\phi &= -I''_\phi \\ J &= I_1 - I''_\phi \\ J' &= J \end{aligned} \tag{13–26}$$

At this point, we restrict the discussion to a rectangular section (see Fig. 13–2) and $\phi = \phi_t^{sc}$. We evaluate the various integrals defined by (13–15) and write the results as

$$\begin{aligned} J &= K_J a^3 b \\ I''_\phi &= +K''_\phi a^3 b \\ I_1 &= K_1 a^3 b \\ I_\phi &= K_\phi a^3 b^3 \\ K_J &= K_1 - K''_\phi \end{aligned} \tag{13–27}$$

where the K's are dimensionless functions of b/a. With these definitions, the expression for $\bar{\lambda}$ takes the form

$$\begin{aligned} \bar{\lambda} &= \left(\frac{G}{E}\right)^{1/2} K_\lambda \frac{1}{b} \\ K_\lambda &= \left\{\frac{K_J K''_\phi}{K_1 K_\phi}\right\}^{1/2} \end{aligned} \tag{13–28}$$

The coefficients are tabulated in Table 13–1. We see that K_λ is essentially constant. Assuming $E \approx 2.6G$ and $K_\lambda \approx 3.2$, we find $\bar{\lambda} \approx 2/b$ and $L_b \approx 2b$. The influence of warping restraint is confined to a region of the order of the depth. Although this result was derived for a rectangular cross section, we will show later that it is typical of solid and also thin-walled *closed* cross sections.

Table 13–1

$\frac{b}{a}$	K_J	K_ϕ	$\frac{K''_\phi}{K_1}$	K_λ
1	2.25	.0311	.156	3.36
2	3.66	.165	.450	3.16
3	4.21	.283	.683	3.23
10	4.99	.425	.964	3.32

We consider next the problem of locating the center of twist. We utilize the solution corresponding to $\phi = \phi_t^{sc}$ and large $\bar{\lambda}L$:

$$\begin{aligned} f &= \frac{M}{GJ}\{1 - e^{-\bar{\lambda}x}\} \\ \omega_1 &= \frac{M}{GJ}\left\{x - \frac{I''_\phi}{\bar{\lambda} I_1}(1 - e^{-\bar{\lambda}x})\right\} \end{aligned} \tag{13–29}$$

† $C = \bar{x}_2 = \bar{x}_3 = 0$ for a rectangular section and $\phi_t|_{\text{shear center}}$ reduces to $\phi_t|_{\text{centroid}}$

The translations of the shear center follow from (13–17):

$$\begin{aligned} u_{s2,1} &= \bar{x}_3(f - \omega_{1,x}) \\ u_{s3,1} &= -\bar{x}_2(f - \omega_{1,x}) \end{aligned} \tag{13–30}$$

By definition, the translations are zero at the center of twist. Setting $\hat{u}_2 = \hat{u}_3 = 0$ in (13–3) and letting x_2^t, x_3^t denote the coordinates of the center of twist lead to

$$\begin{aligned} x_2^t &= g\bar{x}_2 \qquad x_3^t = g\bar{x}_3 \\ \frac{1}{g} &= 1 - \frac{I''_\phi}{\bar{\lambda} I_1}\left(\frac{1 - e^{-\bar{\lambda}x}}{x}\right) \end{aligned} \tag{13–31}$$

We see that the center of twist approaches the shear center as x increases. The maximum difference occurs at $x = 0$ and the minimum at $x = L$.

$$\begin{aligned} g|_{x=0} &= \frac{1}{1 - \dfrac{I''_\phi}{I_1}} = \frac{I_1}{J} \\ g|_{x=L} &= \frac{1}{1 - \dfrac{I''_\phi}{\bar{\lambda} L I_1}} \end{aligned} \tag{13–32}$$

For unrestrained warping, $E_r = 0$, $\bar{\lambda} = \infty$, and $g = 1$.

13–5. FORCE-DISPLACEMENT RELATIONS—MIXED FORMULATION

We first review briefly the basic variational principles for the three-dimensional formulation. The principle of virtual displacements requires

$$\iiint \boldsymbol{\sigma}^T \delta\boldsymbol{\varepsilon}\, d(\text{vol.}) = \iiint \mathbf{b}^T \Delta\mathbf{u}\, d(\text{vol.}) + \iint \mathbf{p}^T \Delta\mathbf{u}\, d(\text{surface area}) \tag{a}$$

to be satisfied for arbitrary $\Delta\mathbf{u}$ and leads to the stress-equilibrium equations and stress-boundary force relations. Note that $\delta\boldsymbol{\varepsilon}$ is a function of $\Delta\mathbf{u}$ and is obtained using the strain-displacement relations. The stress-strain relations can be represented as

$$\boldsymbol{\varepsilon}^T \delta\boldsymbol{\sigma} = \delta V^* \tag{b}$$

since, by definition of the complementary energy density,

$$\varepsilon_i(\boldsymbol{\sigma}) = \frac{\partial V^*}{\partial \sigma_{ii}} \qquad \gamma_{ij}(\boldsymbol{\sigma}) = \frac{\partial V^*}{\partial \sigma_{ij}} \tag{c}$$

By combining (a) and (b), we obtain a variational principle which leads to *both* sets of equations. The stationary requirement,

$$\delta\left[\iiint(\boldsymbol{\sigma}^T\boldsymbol{\varepsilon} - \bar{\mathbf{b}}^T\mathbf{u} - V^*)d(\text{vol.}) - \iint \bar{\mathbf{p}}^T\mathbf{u}\, d(\text{surface area})\right] = 0 \tag{13–33}$$

considering $\boldsymbol{\sigma}$, $\mathbf{u}$ as *independent* quantities, $\boldsymbol{\varepsilon} = \boldsymbol{\varepsilon}(u)$, and $\bar{\mathbf{p}}$, $\bar{\mathbf{b}}$ prescribed, is called *Reissner's principle*.†

† See Ref. 11 and Prob. 10–28. Reissner's principle applies for arbitrary geometry and elastic material. This discussion is restricted to linear geometry. The nonlinear case is treated in Sec. 13–9.

The essential point to recognize is that Reissner's principle allows one to work with $\boldsymbol{\sigma}$ and $\mathbf{u}$ as *independent* quantities. In a displacement formulation (Sec. 13–3), we take $\boldsymbol{\sigma}$ as a function of $\mathbf{u}$, using the stress-displacement relations $\boldsymbol{\sigma} = \mathbf{D}\boldsymbol{\varepsilon} = \boldsymbol{\sigma}(\mathbf{u})$, and $\boldsymbol{\sigma}^T\boldsymbol{\varepsilon} - V^*$ reduces to V, the strain-energy density. In a mixed formulation we start by introducing expansions for the displacements.

The Euler equations for the displacement parameters are obtained by expanding (a). This step leads to the definition of force parameters and force-equilibrium equations. We then generate expansions for the stresses in terms of the force-parameters from an equilibrium consideration. The relations between the force and displacement parameters are obtained from the second stationary requirement:

$$\int_{x_1}\left[\iint(\boldsymbol{\varepsilon}^T\,\delta\boldsymbol{\sigma} - \delta V^*)dA\right]dx_1 = 0 \tag{13–34}$$

The first step was carried out in Sec. 13–2 and the expanded form of $\iint \delta\boldsymbol{\varepsilon}^T\boldsymbol{\sigma}\,dA$ is given by (b) of Sec. 13–2. Letting $\bar{V}^*$ represent the complementary energy per unit length along X_1, and using (13–4), the stationary requirement on the stresses (Equation 13–34) expands to

$$\begin{aligned}\delta F_1 u_{1,1} + \delta F_2(u_{s2,1} - \omega_3) + \delta F_3(u_{s3,1} + \omega_2) + \delta M_2\omega_{2,1}\\ + \delta M_3\omega_{3,1} + \delta M_T\omega_{1,1} + \delta M_\phi f_{,1} + \delta M_R f - \delta\bar{V}^* = 0\end{aligned} \tag{13–35}$$

In order to proceed further, we must express $\bar{V}^*$ in terms of the force parameters $(F_1, F_2, \ldots, M_R)$. Equating the coefficients of each force variation to zero results in the force-displacement relations.

Instead of applying (13–34), one can also obtain (13–35) by applying the principle of virtual forces to a differential element. We followed this approach in Chapter 12 and, since it is of interest, we outline the additional steps required for restrained torsion. One starts with (see Fig. 13–3)

$$\delta\bar{V}^*\,dx_1 = \sum d_i\,\delta P_i = \left[\iint\mathbf{u}^T\,\delta\mathbf{p}\,dA\right]_{x_1} + \left[\iint\mathbf{u}^T\,\delta\mathbf{p}\,dA\right]_{x_1+dx_1} \tag{a}$$

The boundary forces are the stress components acting on the end faces. Taking $\mathbf{u}$ according to (13–3) and considering only M_T, M_ϕ, M_R, we have

$$\begin{aligned}\iint\delta\bar{\mathbf{p}}^T\mathbf{u}\,dA &= \pm\iint\delta\boldsymbol{\sigma}^T\mathbf{u}\,dA\\ &= \pm(\delta M_T\omega_1 + \delta M_\phi f)\end{aligned} \tag{b}$$

where the plus sign applies for a positive face. The virtual-force system must be statically permissible, i.e., it must satisfy the one-dimensional equilibrium equations. This requires

$$\begin{aligned}\delta M_T &= \text{const}\\ \frac{d}{dx_1}(\delta M_\phi) &= \delta M_R\end{aligned} \tag{c}$$

Then,

$$\begin{aligned}\sum d_i\,\delta P_i &= dx_1\left\{f_{,1}\,\delta M_\phi + f\frac{d}{dx_1}\delta M_\phi + \omega_{1,1}\,\delta M_T\right\}\\ &= dx_1\{f_{,1}\,\delta M_\phi + f\,\delta M_R + \omega_{1,1}\,\delta M_T\}\end{aligned} \tag{d}$$

The first procedure (based on (13–34)) is more convenient since it avoids introducing the equilibrium equations. However, one has to have the strain-displacement relations. In certain cases, e.g., a curved member, it is relatively

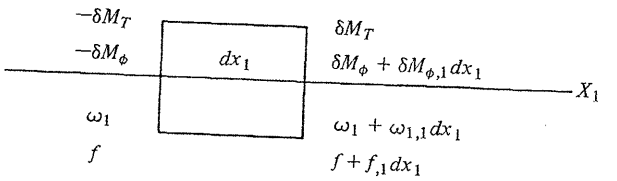

Fig. 13–3. Virtual force system.

easy to establish the force-equilibrium equations by applying the equilibrium conditions to a differential element. We obtain the force-displacement relations by applying the second procedure (principle of virtual forces) without having to introduce strain expansions.†

In what follows, we consider the material to be homogeneous, linearly elastic and isotropic. To simplify the treatment, we also suppose there is no initial strain. The complementary energy density is

$$\bar{V}^* = \frac{1}{2E}\iint\sigma_{11}^2\,dA + \frac{1}{2G}\iint(\sigma_{12}^2 + \sigma_{13}^2)dA \tag{13–36}$$

It remains to introduce expansions for the stress components in terms of the force parameters such that the definition equations for the force parameters are identically satisfied.

Considering first the normal stress, we can write‡

$$\sigma_{11} = \frac{F_1}{A} + \frac{M_2}{I_2}x_3 - \frac{M_3}{I_3}x_2 + \frac{M_\phi}{I_\phi}\phi \tag{a}$$

where ϕ satisfies the orthogonality conditions:§

$$\iint\phi\,dA = \iint x_2\phi\,dA = \iint x_3\phi\,dA = 0 \tag{b}$$

Note that we have imposed a restriction on ϕ. The complementary energy due to σ_{11} expands to

$$(\bar{V}^*)_{\sigma_{11}} = \frac{1}{2E}\left(\frac{F_1^2}{A} + \frac{M_2^2}{I_2} + \frac{M_3^2}{I_3}\right) + \frac{1}{2E_r}\left(\frac{M_\phi^2}{I_\phi}\right) \tag{c}$$

† The approach based on the principle of virtual forces is not applicable for the geometrically nonlinear case.

‡ See (13–11). Problem 13–8 treats the case of a nonhomogeneous material.

§ $F_1 = M_2 = M_3 = 0$ for σ_{11} due to warping restraint.

Finally, substituting for $(\bar{V}^*)_{\sigma_{11}}$ in (13–35), we obtain

$$u_{1,1} = \frac{F_1}{AE} \qquad \omega_{2,1} = \frac{M_2}{EI_2}$$
$$\omega_{3,1} = \frac{M_3}{EI_3} \qquad f_{,1} = \frac{M_\phi}{E_r I_\phi} \tag{d}$$

These expansions coincide with the corresponding relations obtained with the displacement model (see (13–10)).

The shearing stress distribution must satisfy the definition equations for F_2, F_3, M_T and M_R identically. We can obtain suitable expansions by adding a term due to warping restraint to the results for unrestrained torsion and flexure. We write

$$\sigma_{1j} = \sigma_{1j}^f + \sigma_{1j}^u + \sigma_{1j}^r \tag{13–37}$$

where σ_{1j}^f is the flexural distribution due to F_2, F_3; σ_{1j}^u is the unrestrained torsion distribution; and σ_{1j}^r is the distribution due to restrained torsion.

Since we are assuming no in-plane deformation, the flexural distribution for a thin-walled section can be obtained by applying the engineering theory developed in Sec. 11–7. For a solid section, we utilize the results of Sec. 11–5, taking $\nu = 0$.

The shear stress distribution for unrestrained torsion is treated in Secs. 11–2 through 11–4. Since the restrained-torsion distribution is statically equivalent to a torsional moment, we have to distinguish between the *unrestrained* and *restrained* torsional moments:

$$\begin{aligned} M_T &= M_T^u + M_T^r \\ \sigma_{1j}^u &= f(M_T^u) \\ \sigma_{1j}^r &= g(M_T^r) \end{aligned} \tag{13–38}$$

It remains to determine σ_{1j}^r. We follow the same approach as in the engineering theory of flexural shear stress, i.e., we utilize the axial equilibrium equations and stress boundary condition:

$$\begin{aligned} \sigma_{12,2} + \sigma_{13,3} &= -\sigma_{11,1} && \text{in } A \\ \alpha_{n2}\sigma_{12} + \alpha_{n3}\sigma_{13} &= 0 && \text{on } S \end{aligned} \tag{a}$$

Differentiating the expression for σ_{11} and noting the equilibrium equations, we obtain

$$\sigma_{11,1} = \frac{F_2}{I_3}x_2 + \frac{F_3}{I_2}x_3 + \frac{M_R}{I_\phi}\phi \tag{b}$$

Since σ^f satisfies (a) for arbitrary F_2, F_3 and σ^u corresponds to $\sigma_{11} = 0$, it follows that σ^r is due to M_R:

$$\begin{aligned} \sigma_{12,2}^r + \sigma_{13,3}^r &= -\frac{M_R}{I_\phi}\phi && (\text{in } A) \\ \alpha_{n2}\sigma_{12}^r + \alpha_{n3}\sigma_{13}^r &= 0 && (\text{on } S) \end{aligned} \tag{13–39}$$

The orthogonality conditions on ϕ and boundary condition on σ^r ensure that†

$$F_2^r = \iint \sigma_{12}^r\, dA = 0 \qquad F_3^r = \iint \sigma_{13}^r\, dA = 0 \tag{13–40}$$

We solve (13–39) and then evaluate M_T^r from

$$M_T^r = \iint [-(x_3 - \bar{x}_3)\sigma_{12}^r + (x_2 - \bar{x}_2)\sigma_{13}^r]dA \tag{c}$$

Noting (13–40), we see that $M_T^r = M_1^r$. Finally, we write (c) as

$$M_T^r = +C_\phi M_R \tag{13–41}$$

where C_ϕ is a cross-sectional property which depends on ϕ. With this definition,

$$M_T = M_T^u + C_\phi M_R \tag{13–42}$$

When the cross section is thin-walled, we neglect σ_{1n} and (a) reduces to

$$\begin{aligned} \sigma_{1s,s} &= -\sigma_{11,1} \\ \sigma_{1s} &= 0 \quad \text{at a free edge} \end{aligned} \tag{d}$$

We take ϕ and σ_{1s}^r to be *constant* over the thickness t and work with the shear flow $q^r = \sigma_{1s}^r t$. Equation (d) becomes

$$\begin{aligned} q_{,s}^r &= -\frac{M_R}{I_\phi}\phi t \\ q^r &= 0 \quad \text{at a free edge} \end{aligned} \tag{13–43}$$

The orthogonality conditions on ϕ and boundary condition on q^r ensure that

$$\begin{aligned} F_2^r &= \int \alpha_{s2} q^r\, dS = 0 \\ F_3^r &= \int \alpha_{s3} q^r\, dS = 0 \end{aligned} \tag{13–44}$$

Finally, we determine C_ϕ by evaluating M_T^r and equating to (13–41).

We consider next the complementary energy density. We write the expanded form of the shear contribution as

$$\begin{aligned} \bar{V}^*_{\text{shear}} &= \frac{1}{2G}\iint [(\sigma_{12}^f + \sigma_{12}^u + \sigma_{12}^r)^2 + (\sigma_{13}^f + \sigma_{13}^u + \sigma_{13}^r)^2]dA \\ &= \bar{V}_f^* + \bar{V}_u^* + \bar{V}_r^* + \bar{V}_{fu}^* + \bar{V}_{fr}^* + \bar{V}_{ur}^* \end{aligned} \tag{13–45}$$

We have evaluated $\bar{V}_f^*$, $\bar{V}_u^*$ and $\bar{V}_{fu}^*$ in Sec. 11–5. For convenience, these results are summarized below (See Equation 11–98)

$$\begin{aligned} \bar{V}_f^* &= \frac{1}{2G}\left(\frac{F_2^2}{A_2} + \frac{2F_2F_3}{A_{23}} + \frac{F_3^2}{A_3}\right) \\ \bar{V}_u^* &= \frac{(M_T^u)^2}{2GJ} \\ \bar{V}_{uf}^* &= 0 \end{aligned} \tag{a}$$

† See Prob. 13–2.

The coupling term, $1/A_{23}$, vanishes when the section has an axis of symmetry. Also $\bar{V}^*_{uf} = 0$ is a consequence of our assuming the cross section is rigid with respect to in-plane deformation.

We evaluate $\bar{V}^*_r$, using (13–39) ((13–43) for the thin-walled case), and write the results as

$$\bar{V}^*_r = \frac{1}{2G}\iint [(\sigma^r_{12})^2 + (\sigma^r_{13})^2]dA \equiv \frac{1}{2G}\frac{C_r}{J}M_r^2 \tag{13–46}$$

where C_r is a dimensionless factor which depends on ϕ.

The coupling between unrestrained and restrained torsion is expressed as

$$\bar{V}^*_{ur} = \frac{1}{G}\iint (\sigma^u_{12}\sigma^r_{12} + \sigma^u_{13}\sigma^r_{13})dA \equiv \frac{C_{ur}}{GJ}M^u_T M_R \tag{13–47}$$

It is obvious that $C_{ur} = 0$ for a thin-walled open section since σ^u is an odd function of n whereas σ^r is constant over the thickness. We will show later that it is possible to make C_{ur} vanish for a closed section by specializing the homogeneous solution of (13–43). Therefore, in what follows, we will take $C_{ur} = 0$.

Finally, we write the coupling between flexural and restrained torsion as

$$\begin{aligned}\bar{V}^*_{fr} &= \frac{1}{G}\iint (\sigma^f_{12}\sigma^r_{12} + \sigma^f_{13}\sigma^r_{13})dA \\ &\equiv \frac{1}{GJ}(x_{3r}F_2M_R + x_{2r}F_3M_R)\end{aligned} \tag{13–48}$$

where x_{jr} have units of length. If X_2 is an axis of symmetry, $x_{3r} = 0$ since σ^f is symmetrical and σ^r is antisymmetrical with respect to the X_2 axis.

We substitute for $\bar{V}^*$ in (13–35), replace M_T with $M^u_T + C_\phi M_R$, and equate the coefficients of δF_2, δF_3, δM^u_T, and δM_R. The resulting force-displacement relations are

$$\begin{aligned}u_{s2,1} - \omega_3 &= \frac{1}{G}\left(\frac{F_2}{A_2} + \frac{F_3}{A_{23}} + \frac{x_{3r}}{J}M_R\right) \\ u_{s3,1} + \omega_2 &= \frac{1}{G}\left(\frac{F_2}{A_{23}} + \frac{F_3}{A_3} + \frac{x_{2r}}{J}M_R\right) \\ \omega_{1,1} &= \frac{M^u_T}{GJ} \\ C_\phi\omega_{1,1} + f &= \frac{C_r}{GJ}M_R + \frac{1}{GJ}(x_{3r}F_2 + x_{2r}F_3)\end{aligned} \tag{13–49}$$

The corresponding relations for the displacement model are given by (13–12).

Up to this point, we have required ϕ to satisfy the orthogonality relations and also determined σ^r such that there is no energy coupling between σ^u and σ^r ($C_{ur} = 0$). If, in addition, we take

$$\phi = -(C - \bar{x}_3x_2 + \bar{x}_2x_3 + \phi_t) = -\phi_t^{sc}$$

then†

$$\begin{aligned}C_\phi &= +1 \\ M^r_T &= +M_R\end{aligned} \tag{13–50}$$

Note that ϕ_t^{sc} is the warping function for *unrestrained* torsion about the shear center. We discuss the determination of ϕ in Secs. 13–7 and 13–8.

One neglects shear deformations due to flexure by setting

$$\frac{1}{A_2} = \frac{1}{A_3} = \frac{1}{A_{23}} = 0 \tag{13–51}$$

Similarly, we neglect shear deformation due to restrained torsion by setting

$$C_r = x_{2r} = x_{3r} = 0 \tag{13–52}$$

This assumption leads to the center of twist coinciding with the shear center and

$$f = -C_\phi\omega_{1,1} \tag{13–53}$$

One now has to determine M^r_T from the equilibrium relation,

$$M^r_T = M_{\phi,1} + m_\phi \tag{a}$$

If M^u_T is known, it is more convenient to work with

$$M^r_T = M_T - M^u_T \tag{b}$$

In what follows, we outline the solution procedure for restrained torsion and list results for various loadings. We then discuss the application to open and closed cross section.

13–6. SOLUTION FOR RESTRAINED TORSION—MIXED FORMULATION

We suppose only *torsional* loading is applied. The force-displacement relations are obtained by setting F_2, F_3, ω_2, ω_3 equal to zero and $C_\phi = +1$ in (13–49). For convenience, we summarize the governing equations below.

Equilibrium Equations

$$M_{T,1} + m_T = 0 \tag{a}$$

$$M^r_T = M_{\phi,1} \tag{b}$$

Force-Displacement Relations ($\phi = -\phi_t^{sc}$)

$$\begin{aligned}M_\phi &= E_rI_\phi f_{,1} \\ M^u_T &= GJ\omega_{1,1} \\ M^r_T &= \frac{GJ}{C_r}(\omega_{1,1} + f)\end{aligned} \tag{c}$$

† See Prob. 13–3. We include the minus sign so that C_ϕ will be positive.

Boundary Conditions

$$\left.\begin{array}{lll} M_T & \text{or} & \omega_1 \\ M_\phi & \text{or} & f \end{array}\right\} \quad \text{prescribed at each end} \tag{d}$$

Translations of the Shear Center

$$u_{s2,1} = \frac{x_{3r}}{GJ} M_T^r \qquad u_{s3,1} = \frac{x_{2r}}{GJ} M_T^r \tag{e}$$

We start by integrating (a):

$$M_T = C_1 - \int m_T \, dx_1 = C_1 + M_{Tp} \tag{13-54}$$

Substituting (c) in (b) and (13–54) leads to the governing equations for ω_1 and f:

$$\begin{aligned} (1 + C_r)\omega_{1,1} + f &= \frac{C_r}{GJ}(C_1 + M_{Tp}) \\ C_r E_r I_\phi f_{,11} - GJ(\omega_{1,1} + f) &= 0 \end{aligned} \tag{f}$$

After some manipulation, (f) becomes

$$\begin{aligned} \omega_1 &= -\frac{E_r I_\phi}{GJ} f_{,1} + \frac{C_1 x_1}{GJ} + C_2 + \frac{1}{GJ}\int M_{Tp}\, dx_1 \\ f_{,11} - \lambda^2 f &= \frac{\lambda^2}{GJ}(C_1 + M_{Tp}) \end{aligned} \tag{g}$$

where λ^2 is defined as†

$$\begin{aligned} C_s &= \frac{1}{1 + C_r} \\ \lambda^2 &= C_s \frac{GJ}{E_r I_\phi} \end{aligned} \tag{13-55}$$

Equation (g) corresponds to (h), (i) of Sec. 13–4.

The general solution for f and ω_1 has the following form:

$$\begin{aligned} f &= C_3 \cosh \lambda x + C_4 \sinh \lambda x - \frac{C_1}{GJ} + f_p \\ \omega_1 &= \frac{C_1}{GJ} x + C_2 + \frac{1}{GJ}\int M_{Tp}\, dx \\ &\quad - \frac{C_s}{\lambda L}(C_3 \sinh \lambda x + C_4 \cosh \lambda x) - \frac{C_s}{\lambda^2}\frac{df_p}{dx} \end{aligned} \tag{13-56}$$

where f_p is the particular solution due to M_{Tp}. We have dropped the subscript on x_1 for convenience.

† The corresponding paramater for the displacement-model formulation is $\bar{\lambda}$ (see (13–21)).

The significance of λ has been discussed in Sec. 13–4. We should expect, on the basis of the results obtained there, that λL will be large with respect to unity for a closed section. We will return to the evaluation of λ in the next section. In the examples below, we list for future reference the solution for various loading and boundary conditions.

Example 13–1

Cantilever—Concentrated Moment

Fig. E13–1

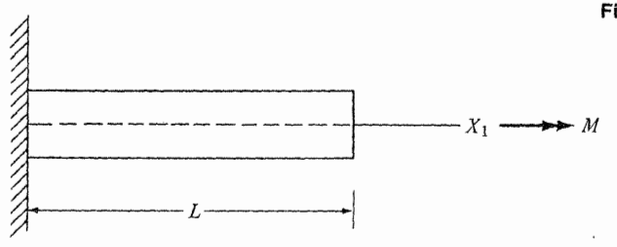

The boundary conditions (Fig. E13–1) are

$$\begin{array}{ll} x = 0 & \omega_1 = f = 0 \\ x = L & M_T = M \\ & f_{,x} = 0 \end{array} \tag{a}$$

Starting with (13–54), we set $M_{Tp} = 0$ and $C_1 = M$. The remaining constants are determined from

$$\begin{array}{ll} \omega_1 = f = 0 & \text{at } x = 0 \\ f_{,x} = 0 & \text{at } x = L \end{array} \tag{b}$$

and the final solution is†

$$\begin{aligned} f &= \frac{M}{GJ}\left[-1 + \frac{\cosh \lambda(L - x)}{\cosh \lambda L}\right] \\ \omega_1 &= \frac{M}{GJ}\left[x - \frac{C_s}{\lambda \cosh \lambda L}\{\sinh \lambda L - \sinh \lambda(L - x)\}\right] \\ M_\phi &= M\left[\frac{-C_s}{\lambda \cosh \lambda L}\sinh \lambda(L - x)\right] \\ M_T^u &= M\left[1 - C_s \frac{\cosh \lambda(L - x)}{\cosh \lambda L}\right] \\ M_T^r &= M - M_T^u \end{aligned} \tag{13-57}$$

† The corresponding solution based on the displacement model is given by (13–22), (13–26). The expressions for f differ by a minus sign. This is due to our choice of ϕ. We took $\phi = \phi_t^{sc}$ in the displacement model and $\phi = -\phi_t^{sc}$ in the mixed model.

Note that $C_s = 1$ when the complementary energy term due to the restrained torsion shear stress (σ^r) is neglected.

The translations of the shear center are obtained by integrating

$$u_{s2,x} = \frac{x_{3r}}{GJ} M_T^r \qquad u_{s3,x} = \frac{x_{2r}}{GJ} M_T^r \tag{c}$$

and requiring u_{s2}, u_{s3} to vanish at $x = 0$. We write the result as

$$\begin{aligned} u_{s2} &= x_{3r} u \qquad u_{s3} = x_{2r} u \\ u &= \int_x M_T^r \, dx = \frac{M}{GJ} x - \omega_1 \end{aligned} \tag{13-58}$$

Let x_j^t, u_j^t denote the coordinates and translations of the center of twist. By definition,

$$\begin{aligned} u_2^t &= u_{s2} - \omega_1(x_3^t - \bar{x}_3) = 0 \\ u_3^t &= u_{s3} + \omega_1(x_2^t - \bar{x}_2) = 0 \end{aligned} \tag{d}$$

Substituting for u_{sj} and ω_1, we obtain†

$$\begin{aligned} x_2^t - \bar{x}_2 &= -g x_{2r} \qquad x_3^t - \bar{x}_3 = g x_{3r} \\ g &= -1 + \frac{x}{x - \dfrac{C_s}{\lambda \cosh \lambda L}[\sinh \lambda L - \sinh \lambda(L - x)]} \end{aligned} \tag{13-59}$$

The limiting values‡ of g occur at $x = 0, L$.

$$\begin{aligned} g|_{x=0} &= \frac{1}{-1 + \dfrac{1}{C_s}} \\ g|_{x=L} &= \frac{1}{-1 + \dfrac{\lambda L}{C_s \tanh \lambda L}} \end{aligned} \tag{13-60}$$

Note that $x_{jr} = 0$ if X_k ($j \neq k$) is an axis of symmetry for the cross section. Also, $x_{2r} = x_{3r} = 0$ if we neglect shear deformation due to the restrained shear stress and, in this case, the center of twist coincides with the shear center throughout the length.

Example 13–2

We consider next the case where warping is restrained at *both* ends; the left end ($x = 0$) is fixed and the right end rotates a specified amount ω under the action of a torsional moment. The boundary conditions are

$$x = 0 \qquad \omega_1 = f = 0 \tag{a}$$

$$x = L \qquad \omega_1 = \omega \qquad f = 0 \tag{b}$$

† See (13–31), (13–32) for the displacement model solution.

‡ There is no twist or translation at $x = 0$. We determine $g(0)$ by applying L'Hôspital's rule to (13–59).

To simplify the analysis, we suppose there is no distributed load. Starting with the general solution,

$$\begin{aligned} M_T &= C_1 \\ f &= C_3 \cosh \lambda x + C_4 \sinh \lambda x - \frac{C_1}{GJ} \\ \omega_1 &= \frac{C_1 x}{GJ} + C_2 - \frac{C_s}{\lambda}\{C_3 \sinh \lambda x + C_4 \cosh \lambda x\} \end{aligned} \tag{c}$$

and enforcing the boundary conditions leads to the following relations:

$$\begin{aligned} C_3 &= \frac{C_1}{GJ} \qquad C_4 = C_3\left(\frac{1-c}{s}\right) \\ c &= \cosh \lambda L \qquad s = \sinh \lambda L \\ C_2 &= \frac{C_s C_4}{\lambda} \\ &\frac{C_1 L}{GJ}\left\{1 + \frac{C_s}{\lambda L}\left[\frac{2(1-c)}{s}\right]\right\} = \omega \\ f &= \frac{C_1}{GJ}\left\{\cosh \lambda x + \left(\frac{1-c}{s}\right)\sinh \lambda x - 1\right\} \\ \omega_1 &= \frac{C_1}{GJ}\left\{x + \frac{C_s}{\lambda}\left[\left(\frac{1-c}{s}\right)(1 - \cosh \lambda x) - \sinh \lambda x\right]\right\} \\ M_T &= C_1 \equiv M \\ M_T^u &= C_1\left\{1 - C_s\left[\cosh \lambda x + \left(\frac{1-c}{s}\right)\sinh \lambda x\right]\right\} \\ M_T^r &= M_T - M_T^u \\ M_\phi &= E_r I_\phi \lambda \left(\frac{C_1}{GJ}\right)\left\{\sinh \lambda x + \left(\frac{1-c}{s}\right)\cosh \lambda x\right\} \end{aligned} \tag{13-61}$$

We write the relation between the end rotation, ω, and the end moment M, as

$$\omega = \frac{M}{GJ} L_{\text{eff}}$$

where L_{eff} denotes the effective length:

$$\begin{aligned} L_{\text{eff}} &= L\left[1 - \frac{2C_s}{\lambda L}\left(\frac{c-1}{s}\right)\right] \\ &= L(1 - C_s C_\lambda) \end{aligned} \tag{13-62}$$

The following table shows the variation of C_λ with λL. For $\lambda L > 4$, $C_\lambda \approx 2/\lambda L$. Note that $C_s = 1$ if transverse shear deformation due to restrained torsion is neglected.

λL	C_λ
0.5	0.98
1	.924
2	.76
3	.60
4	.48

Example 13–3

Uniform Distributed Moment-Symmetrical Supports

The general solution for m_T = constant (we let $m_T = m$ for convenience) is:

$$\begin{aligned} M_T &= C_1 - mx \\ f &= \frac{C_3}{L}\cosh\lambda x + \frac{C_4}{L}\sinh\lambda x - \frac{C_1}{GJ} + \frac{mx}{GJ} \\ \omega_1 &= \frac{C_1}{GJ}x + C_2 - \frac{m}{GJ}\left(\frac{x^2}{2} + \frac{C_s}{\lambda^2}\right) - \frac{C_s}{\lambda L}(C_3\sinh\lambda x + C_4\cosh\lambda x) \end{aligned} \tag{a}$$

We consider the boundary conditions to be identical at both ends and measure x from the midpoint (Fig. E13–3). Symmetry requires

$$\left.\begin{aligned} M_T &= 0 \\ f &= 0 \end{aligned}\right\} \quad \text{at } x = 0 \tag{b}$$

and (a) reduces to

$$\begin{aligned} M_T &= -mx \\ f &= \frac{C_4}{L}\sinh\lambda x + \frac{m}{GJ}x \\ \omega_1 &= C_2 - \frac{m}{GJ}\left\{\frac{x^2}{2} + \frac{C_s}{\lambda^2}\right\} - \frac{C_sC_4}{\lambda L}\cosh\lambda x \end{aligned} \tag{13–63}$$

We treat first the case where the end section is fixed with respect to both rotation and warping. Requiring (13–63) to satisfy

$$f = \omega_1 = 0 \qquad \text{at } x = L/2 \tag{a}$$

results in

$$\begin{aligned} f &= \frac{m}{GJ}\left\{x - \frac{1}{2s}\sinh\lambda x\right\} \\ \omega_1 &= \frac{mL^2}{GJ}\left\{\frac{1}{8}\left[1 - 4\left(\frac{x}{L}\right)^2\right] + \frac{C_s}{2s\lambda L}(\cosh\lambda x - c)\right\} \\ M_T &= -mx \\ M_T^u &= mL\left\{-\frac{x}{L} + \frac{C_s}{2s}\sinh\lambda x\right\} \\ M_\phi &= \frac{mC_s}{\lambda^2}\left\{1 - \frac{\lambda L}{2s}\cosh\lambda x\right\} \\ c &= \cosh\frac{\lambda L}{2} \qquad s = \sinh\frac{\lambda L}{2} \end{aligned} \tag{13–64}$$

The solution represents an upper bound. A lower bound is obtained by allowing the section to wrap, i.e., by taking

$$\omega_1 = f_{,x} = 0 \qquad \text{at } x = \frac{L}{2} \tag{b}$$

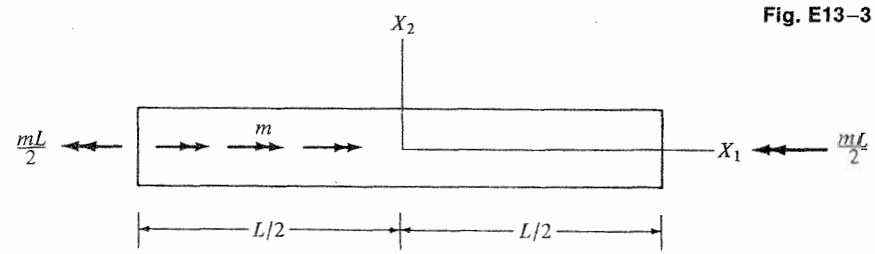

Fig. E13–3

and the result is

$$\begin{aligned} f &= \frac{m}{GJ}\left\{x - \frac{1}{\lambda c}\sinh\lambda x\right\} \\ \omega_1 &= \frac{mL^2}{GJ}\left\{\frac{1}{8}\left[1 - 4\left(\frac{x}{L}\right)^2\right] + \frac{C_s}{c(\lambda L)^2}(\cosh\lambda x - c)\right\} \\ M_T &= -mx \\ M_T^u &= m\left\{-x + \frac{C_s}{\lambda c}\sinh\lambda x\right\} \\ M_\phi &= m\left\{\frac{C_s}{\lambda^2}\left(1 - \frac{\cosh\lambda x}{c}\right)\right\} \\ c &= \cosh\frac{\lambda L}{2} \end{aligned} \tag{13–65}$$

13–7. APPLICATION TO THIN-WALLED OPEN CROSS SECTIONS

In what follows, we apply the mixed formulation theory to a wide flange section and also to a channel section. We first determine the cross-sectional properties corresponding to $\phi = -\phi_t^{sc}$ and then obtain general expressions for the stresses in terms of dimensionless geometric parameters. Before discussing the individual sections, we briefly outline the procedure for an arbitrary section.

Consider the arbitrary segment shown in Fig. 13–4. We select a positive sense for S and an arbitrary origin (point P). The unrestrained torsion warping function is obtained by applying (11–29) to the centerline curve and requiring the section to rotate about the shear center.†

$$\sigma_{1s}^u\big|_{\text{centerline}} = \frac{q^u}{t} = \frac{M_T^u}{J}\left(\rho_{sc} + \frac{\partial}{\partial S}\phi_t^{sc}\right) \tag{13–66}$$

where ρ_{sc} is positive when translation in the $+S$ direction rotates the position vector about the $+X_1$ direction. The unrestrained torsional shear flow is zero

† By definition, $k_1 = M_T^u/GJ$. We work with q^u rather than γ_{1s}^u to facilitate treatment of closed and mixed sections where one generates q^u in terms of M_T^u/J.

for an open section. Then, taking $\phi = -\phi_t^{sc}$ and integrating leads to

$$\phi = \phi_P + \int_{S_P}^{S} \rho_{sc}\, dS \tag{13-67}$$

Note that one can select the sense of S arbitrarily. Also, ϕ varies linearly with S when the segment is straight. The constant ϕ_P is evaluated by enforcing the orthogonality condition ($\sigma_{11}^r \to F_1 = 0$),

$$\int \phi t\, dS = 0 \tag{a}$$

If the section has an axis of symmetry, $\phi_P = 0$, if we take P on the symmetry axis. The remaining orthogonality conditions ($\sigma_{11}^r \to M_2 = M_3 = 0$),

$$\int \phi x_2 t\, dS = \int \phi x_3 t\, dS = 0 \tag{b}$$

are identically satisfied by definition of the shear center.†

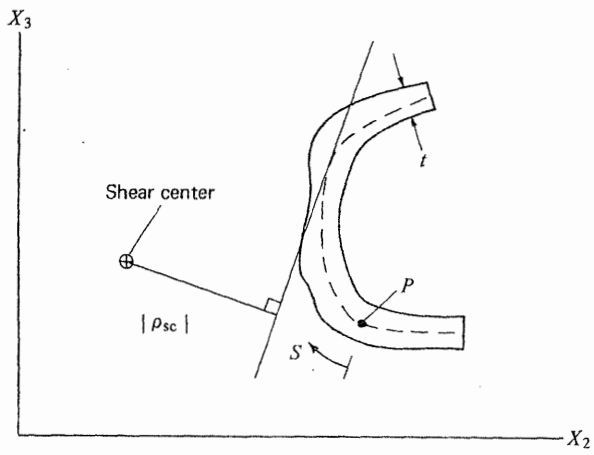

Fig. 13–4. Notation for determination of the warping function.

When the section has branches, we apply (13–67) to each branch. One has only to require continuity of ϕ at the junction point. As an illustration, consider the section shown in Fig. 13–5. The distribution of ϕ for the three branches is given by

$$\begin{aligned} A - B \quad & \phi = \phi_P + \textstyle\int_0^S \rho_{sc}\, dS \\ B - C \quad & \phi = \phi_B + \textstyle\int_0^S \rho_{sc}\, dS \\ B - D \quad & \phi = \phi_B + \textstyle\int_0^S \rho_{sc}\, dS \end{aligned} \tag{c}$$

We are taking the origin at B for branches $B - C$ and $B - D$.

† See Prob. 13–1.

The shear flow due to M_T^r is obtained by integrating (13–43) and noting (13–50). For convenience, we let

$$q^r = -\frac{M_T^r}{I_\phi}\bar{q}^r \tag{13-68}$$

With this notation, the resulting expression simplifies to

$$\bar{q}^r = \bar{q}_P^r + \int_{S_P}^{S} \phi t\, dS = \bar{q}_P^r + Q_\phi \tag{13-69}$$

We start at a free edge and work inward. A $+q$ points in the $+S$ direction (see Fig. 13–5). Then, $a + \bar{q}^r$ corresponds to $-q^r$, i.e. q^r acting in the $-S$ direction. If the section has an axis of symmetry, ϕ is an odd function with respect to the axis and $\bar{q}^r$ is an even function.

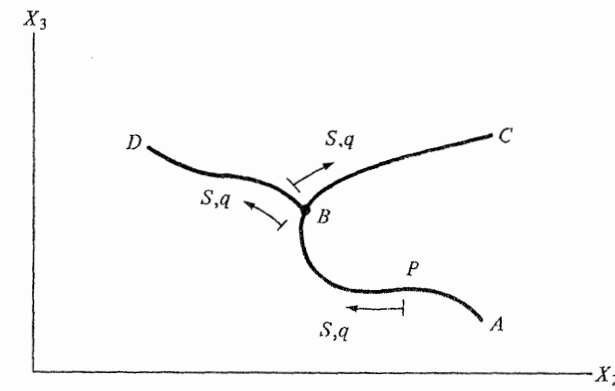

Fig. 13–5. Example of a section with branches.

Once ϕ and $\bar{q}^r$ are known, we can evaluate I_ϕ and C_r with (13–10), (13–46):

$$\begin{aligned} I_\phi &= \iint \phi^2\, dA = \int \phi^2 t\, dS \\ C_r &= \frac{J}{M_R^2}\iint [(\sigma_{12}^r)^2 + (\sigma_{13}^r)^2]dA \\ &= \frac{J}{I_\phi^2}\int (\bar{q}^r)^2 \frac{dS}{t} \end{aligned} \tag{13-70}$$

In order to evaluate x_{2r}, x_{3r}, we need the flexural shear stress distributions. We let $q^{(j)}$ be the distribution due to F_j and write

$$q^{(j)} = -\frac{F_j}{I_k}\bar{q}^{(j)} \tag{13-71}$$

$$\begin{aligned} j &= 2 \qquad k = 3 \\ j &= 3 \qquad k = 2 \end{aligned}$$

The coupling terms are defined by (13–48), which reduces to

$$\int q^f q^r \frac{dS}{t} = \frac{F_2 M_T^r}{J} x_{3r} + \frac{F_3 M_T^r}{J} x_{2r} \tag{a}$$

for a thin-walled section with $\phi = -\phi_t^{sc}$. Substituting for q^r and q^f results in

$$\begin{aligned} x_{2r} &= \frac{J}{I_2 I_\phi} \int \overline{q}^r \overline{q}^{(3)} \frac{dS}{t} \\ x_{3r} &= \frac{J}{I_3 I_\phi} \int \overline{q}^r \overline{q}^{(2)} \frac{dS}{t} \end{aligned} \tag{13–72}$$

If X_2 is an axis of symmetry, $\overline{q}^r$ is an even function of x_3, $\overline{q}^{(2)}$ is an odd function, and $x_{3r} = 0$. By analogy, $x_{2r} = 0$ if X_3 is an axis of symmetry.

The definition equations for C_r, I_ϕ, x_{2r}, and x_{3r} apply for an *arbitrary* thin-walled section. When the section is *closed*, we have only to modify the equations for ϕ, $\overline{q}^r$, and $\overline{q}^{(j)}$. We will discuss this further in the next section.

Example 13–4

Symmetrical I Section

The I section shown (Fig. E13–4A) has two axes of symmetry; it follows that the shear center coincides with the centroid and the warping function is *odd* with respect to X_2, X_3.

Fig. E13–4A

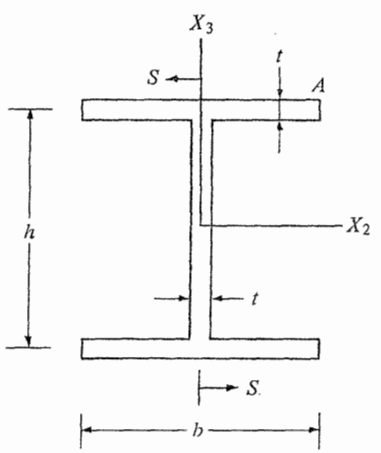

Applying (13–67), we obtain

$$\begin{aligned} \phi &= 0 && \text{for web} \\ \phi &= \frac{h}{2} S && \text{for flange} \end{aligned} \tag{a}$$

Note that the sense of S is reversed for the bottom flange.

The shear flow vanishes at $S = \pm b/2$. Applying (13–69) and starting from pt. A, we find

$$\overline{q}^r = \int_{-b/2}^{S} \phi t \, dS = -\frac{b^2 h t}{16}\left[1 - \left(\frac{2S}{b}\right)^2\right] \tag{b}$$

The distributions of ϕ and q^r are shown in Fig. E13–4B, where the arrows indicate the sense of q^r for $+M_T^r$.

Fig. E13–4B

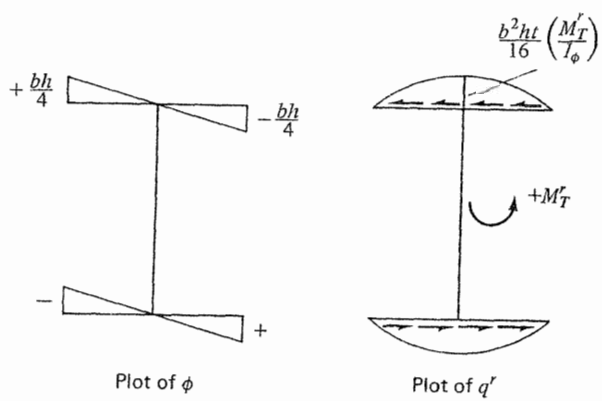

We express the cross-sectional properties in terms of h, t, and a shape factor ξ:

$$\begin{aligned} \xi &= b/h \\ J &= \frac{ht^3}{3}(1 + 2\xi) \\ I_\phi &= \frac{th^5}{24}\xi^3 \\ C_r &= \xi_1 \left(\frac{t}{h}\right)^2 \\ \xi_1 &= \frac{8}{10}\left(\frac{1 + 2\xi}{\xi}\right) \end{aligned} \tag{c}$$

The dimensionless parameters occurring in the solution of the differential equations for the mixed formulations are C_s and λL (see (13–55)). Using (c) and assuming a value of 1/3 for Poisson's ratio, we write

$$\begin{aligned} \xi_2 &= \left[\frac{3(1 + 2\xi)}{\xi^3}\right]^{1/2} \\ C_s &= \frac{1}{1 + \xi_1 \left(\frac{t}{h}\right)^2} \\ \lambda L &= \xi_2 C_s^{1/2} \left(\frac{t}{h}\right)\left(\frac{L}{h}\right) \end{aligned} \tag{d}$$

The coefficients ξ_1, ξ_2 are tabulated below:

$\xi = \dfrac{b}{h}$	ξ_1	ξ_2
1	2.4	3
0.75	2.66	4.22
0.50	3.2	6.93

Since $(t/h)^2 \ll 1$ and $\xi_1 \approx 0(1)$, we see that $C_s \approx 1$. The warping parameter, λL, depends on t/h as well as L/h. This is the essential difference between open and closed cross sections. For the solid section, we found that $\lambda L = 0(L/h)$ and, since L/h is generally large in comparison to unity, the influence of restrained warping is localized.† The value of λL for an open section is $0(L/h)\ 0(t/h)$ and the effect of warping restraint is no longer confined to a region on the order of the depth at the end but extends further into the interior.

We consider next the determination of the stresses due to restrained warping. The general expressions are

$$\sigma^r_{11} = \frac{M_\phi}{I_\phi}\phi \qquad \sigma^r_{1s} = \frac{q^r}{t} \tag{e}$$

Using the distribution for ϕ and q^r shown above, the maximum values of normal and shear stress are

$$|\sigma^r_{11}|_{\max} = \frac{6}{th^3\xi^2}M_\phi \qquad |\sigma^r_{1s}|_{\max} = \frac{3}{2h^2t\xi}M^r_T \tag{f}$$

The shearing stress due to unrestrained torsion is obtained from

$$\sigma^u_{1s} = \frac{M^u_T}{J}t = \frac{3}{ht^2(1+2\xi)}M^u_T \tag{g}$$

To gain some insight as to the relative magnitude of the various stresses, we consider a member fully restrained at one end and subjected to a torsional moment M at the other end. This problem is solved in Example 13–1. The maximum values of the moments are

$$\left.\begin{aligned} M_\phi|_{\max} &= -MLC_s\frac{\tanh\lambda L}{\lambda L} \\ M^r_T|_{\max} &= C_sM \end{aligned}\right\} \quad \text{at } x = 0 \tag{h}$$

We substitute for the moments in (f), (g) and write the results in terms of σ^u_m, the maximum

† We defined the boundary layer length, L_b, (see (13–24), (13–25)) as

$$e^{-\lambda L_b} \approx 0 \Rightarrow \frac{L_b}{L} \approx \frac{4}{\lambda L}$$

shear stress for unrestrained torsion:

$$\begin{aligned} |\sigma^r_{11}|_m &= (\xi_3C_s^{1/2}\tanh\lambda L)\sigma^u_m \\ |\sigma^r_{1s}|_m &= \left(\xi_4C_s\left(\frac{t}{h}\right)\right)\sigma^u_m \\ \sigma^u_m &= \frac{Mt}{J} \\ \xi_3 &= \tfrac{2}{3}\xi\xi_2 \qquad \xi_4 = \tfrac{3}{8}(\xi_3)^2 \end{aligned} \tag{i}$$

The variation of these coefficients with b/h is shown below:

$\xi = \dfrac{b}{h}$	ξ_3	ξ_4
1	2	1.5
0.75	2.11	1.67
0.50	2.31	2

Since C_s, ξ_3, and ξ_4 are of 0(1), it follows that

$$\begin{aligned} |\sigma^r_{11}|_m &= 0(\sigma^u_m) \\ |\sigma^r_{1s}|_m &= \frac{t}{h}0(\sigma^u_m) \end{aligned} \tag{j}$$

The additional shearing stress (σ^r_{1s}) is small in comparison to the unrestrained value. Therefore, it is reasonable to neglect the terms in the complementary energy density due to σ^r_{1s}, i.e., to take $C_r = 0$ and $C_s = 1$ for an open section. We will show in the next section that this assumption is not valid for a closed section.

Example 13–5

Channel Section

We consider next the channel section shown in Fig. E13–5A. Since X_2 is an axis of symmetry, $x_3 = x_{3r} = 0$. The expressions for the location of the centroid, shear center,

Fig. E13–5A

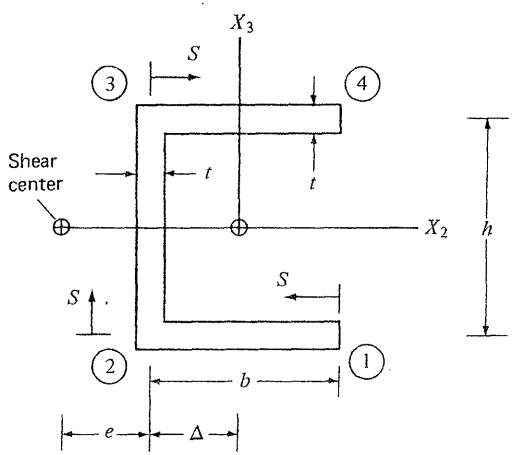

and I_2 are

$$\begin{aligned} \Delta &= b\frac{\xi}{1+2\xi} \\ e &= b\frac{3\xi}{1+6\xi} = b\bar{e} \\ I_2 &= \frac{th^3}{12}(1+6\xi) \\ \xi &= \frac{b}{h} \end{aligned} \tag{a}$$

The dimensionless coefficient $\bar{e}$ is essentially constant, as the following table shows:

$\xi = \frac{b}{h}$	$\bar{e}$
1.00	0.429
0.75	0.409
0.50	0.375

We determine ϕ by applying (13–67) to the three segments. Taking S as indicated above, and noting that ϕ is odd with respect to X_2, we obtain:

Segment 1–2

$$\begin{aligned} \rho_{sc} &= -\frac{h}{2} \\ \phi &= \frac{bh}{2}\left(1-\bar{e}-\frac{S}{b}\right) \end{aligned} \tag{b}$$

Segment 2–3

$$\begin{aligned} \rho_{sc} &= +e \\ \phi &= \frac{bh}{2}\left(-1+\frac{2S}{h}\right)\bar{e} \end{aligned}$$

The distribution is plotted in Fig. E13–5B. Since $\bar{e} < 1/2$, the maximum value of ϕ occurs at point 1 (and 4).

We generate next the distribution of $\bar{q}^r$, starting at point 1 (since $q = 0$ at that point) and using (b):

Segment 1–2

$$\bar{q}^r = \int_0^S \phi t\, dS = \frac{bht}{2}\left\{(1-\bar{e})S - \frac{1}{2}\frac{S^2}{b}\right\} \tag{c}$$

Segment 2–3

$$\bar{q}^r = \left(\bar{q}^r\right)_2 + \frac{bht\bar{e}}{2}\left(-S+\frac{S^2}{h}\right)$$

The distribution of q^r is plotted in Fig. E13–5C.

Fig. E13–5B

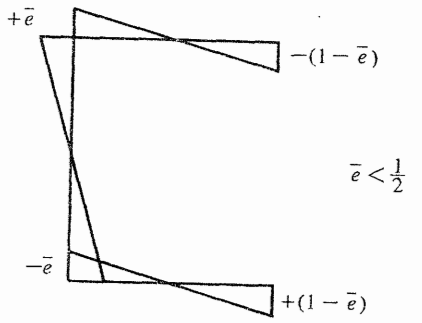

Distribution of $\phi \Big/ \frac{bh}{2}$

Fig. E13–5C

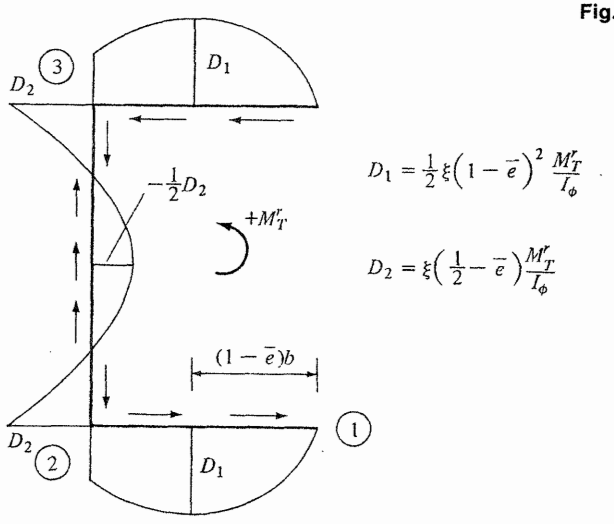

Distribution of $q^r \Big/ \frac{bh^2t}{2}$

The expressions for J, I_ϕ, C_r, C_s and λL are written in the same form as for the previous example:

$$\begin{aligned} J &= ht^3\left(\frac{1+2\xi}{3}\right) = ht^3\xi_J \\ I_\phi &= h^5t\left[\frac{\xi^3}{12}\left(\frac{2+3\xi}{1+6\xi}\right)\right] = h^5t\xi_\phi \\ C_r &= \left(\frac{t}{h}\right)^2\left\{\frac{(1+2\xi)(3+16\xi+42\xi^2+36\xi^3)}{5\xi^2(2+3\xi)^2}\right\} = \left(\frac{t}{h}\right)^2\xi_1 \\ C_s &= \frac{1}{1+C_r} \\ \lambda L &= C_s^{1/2}\left[\frac{G\xi_J}{E_r\xi_\phi}\right]^{1/2}\left(\frac{t}{h}\right)\left(\frac{L}{h}\right) = C_s^{1/2}\xi_2\left(\frac{t}{h}\right)\left(\frac{L}{h}\right) \end{aligned} \tag{d}$$

The following table shows the variation of ξ_1 and ξ_2 with b/h for $G/E_r = 3/8$, i.e., Poisson's ratio equal to 1/3. Note that the comments made for the wide-flange section also apply to the channel section.

$\xi = \dfrac{b}{h}$	ξ_1	ξ_2
1	2.33	2.55
0.75	2.65	3.39
0.50	3.4	5.24

In order to evaluate x_{2r}, we need the flexural shear stress distribution due to F_3. Applying (11–106) leads to

Segment 1–2

$$\bar{q}^{(3)} = -\frac{ht}{2}S$$

Segment 2–3 (e)

$$\bar{q}^{(3)} = -\frac{bht}{2} - \frac{St}{2}(h - S)$$

The distribution is plotted in Fig. E13–5D; the arrows indicate the sense of q for a $+F_3$.

Fig. E13–5D

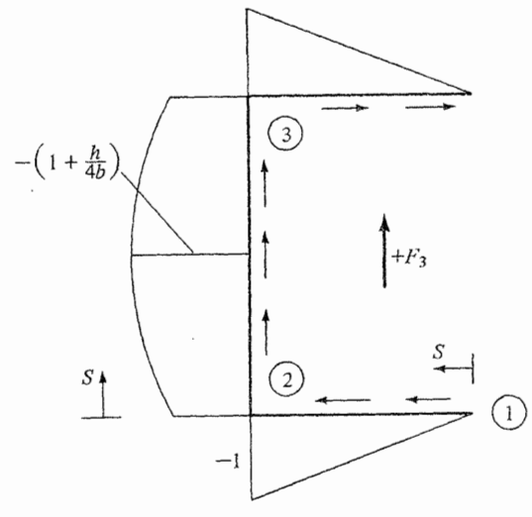

Distribution of $\bar{q}^{(3)}\Big/\dfrac{bht}{2}$

Substituting for $\bar{q}^r$, $\bar{q}^{(3)}$, and the cross-sectional constants in (13–72) leads to

$$x_{2r} = -b\xi_3\left(\frac{t}{h}\right)^2$$

$$\xi_3 = \frac{(1 + 2\xi)(-0.2 + 5\xi^2 + 6\xi^3)}{\xi^2(1 + 6\xi)(2 + 3\xi)} \tag{f}$$

The coefficient is of order unity, as the following table shows:

ξ	ξ_3
1	0.926
0.5	1.03

In Example 13–1, we determined expressions for the coordinates of the center of twist in terms of x_{jr} and C_s. It is of interest to evaluate these expressions for this cross section. The coordinates at $x = 0$ (see (13–59), (13–60)) are

$$x_3' = 0$$

$$x_2' = \bar{x}_2 - x_{2r}|g|_{x=0} \tag{g}$$

$$|g|_{x=0} = \frac{1}{-1 + \dfrac{1}{C_s}}$$

Substituting for C_s, x_{2r}, and evaluating $\bar{x}_2$,

$$\bar{x}_2 = -(\Delta + e) = -b\left(\frac{\xi}{1 + 2\xi} + \frac{3\xi}{1 + 6\xi}\right) = -\xi_4 b \tag{h}$$

we obtain

$$x_2' = \bar{x}_2(1 - \xi_5) \tag{i}$$

$$\xi_5 = \frac{\xi_3}{\xi_1\xi_4} \tag{j}$$

Typical values are listed below:

ξ	ξ_4	ξ_5
1	0.476	0.836
0.5	0.625	0.485

13–8. APPLICATION TO THIN-WALLED CLOSED CROSS SECTIONS

We treat first a single closed cell and then generalize the procedure for multicell sections. Consider the section shown in Fig. 13–6. The $+S$ direction is from X_2 toward X_3 (corresponding to a rotation about the $+X_1$ direction). Using the results developed in Sec. 11–4, the shear flow for unrestrained torsion is

$$q^u = \frac{M_T^u}{J}C \qquad C = \frac{2A}{\oint \dfrac{dS}{t}} \tag{a}$$

where A is the area enclosed by the centerline curve. The shearing stress varies linearly over the thickness,

$$\sigma_{1s}^{u} = \frac{M_T^u}{J}\left(2n + \frac{C}{t}\right) = \sigma|_{\text{open}} + \sigma|_{\text{closed}} \tag{b}$$

but the *open-section* term has a zero resultant.

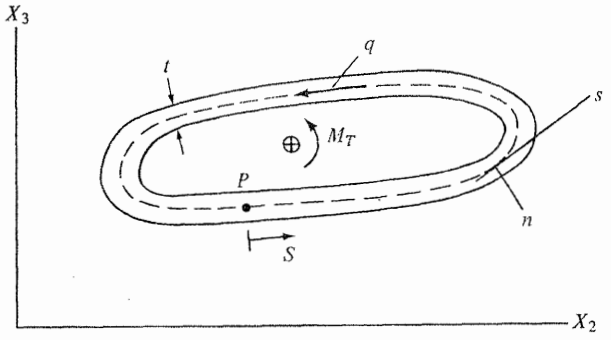

Fig. 13–6. Notation for single closed cell.

Substituting for q^u in (13–66), taking $\phi = -\phi_t^{sc}$, and integrating from point P lead to

$$\phi = \phi_P + \int_{S_P}^{S} \rho_{sc}\, dS - C\int_{S_P}^{S} \frac{dS}{t} \tag{13–73}$$

We determine ϕ_P by enforcing

$$\oint \phi t\, dS = 0 \tag{c}$$

The two additional orthogonality conditions

$$\oint x_2 \phi t\, dS = \oint x_3 \phi t\, dS = 0 \tag{d}$$

are identically satisfied by definition of the shear center.†

The shear flow due to M_T^r is defined by (13–69),

$$\begin{aligned} q^r &= -\frac{M_T^r}{I_\phi}\bar{q}^r \\ \bar{q}^r &= \bar{q}_P^r + \int_{S_P}^{S} \phi t\, dS = \bar{q}_P^r + Q_\phi \end{aligned} \tag{e}$$

† Noting that $x_2 t = dQ_3/ds$, we can write

$$\oint x_2 \phi t\, ds = -\oint Q_3 \phi_{,s}\, dS$$

We merely have to identify this term as the moment of the flexural shear stress about the shear center. See Prob. 11–12.

where $\bar{q}^r$ is indeterminate. Our formulation is based on no energy coupling between q^u and q^r, i.e., we require (see (13–47))

$$\oint q^u q^r \frac{dS}{t} = 0 \tag{13–74}$$

Noting that q^u is constant for a single cell, and using (e), we obtain

$$\bar{q}_P^r = -\frac{\oint Q_\phi \dfrac{dS}{t}}{\oint \dfrac{dS}{t}} \tag{13–75}$$

The flexural shear flow distributions for F_2, F_3 are generated with (11–110). We merely point out here that there is no energy coupling between q^u and q^f:

$$\oint q^u q^f \frac{dS}{t} = 0 \tag{f}$$

One can interpret (13–74) and (f) as requiring q^f, q^r to lead to no twist deformation, i.e., $\omega_{1,1} = 0$. We have expressed the flexural shear flows as (see (13–71)):

$$q^f|_{Fj} \equiv q^{(j)} = -\frac{F_j}{I_k}\bar{q}^{(j)} \qquad \begin{matrix} j = 2 & k = 3 \\ j = 3 & k = 2 \end{matrix} \tag{g}$$

Finally, the definition equations for the cross-sectional properties have the same form as for the open-section:

$$\begin{aligned} &\text{Eq. 13–70} \Rightarrow I_\phi,\ C_r \\ &\text{Eq. 13–72} \Rightarrow x_{2r},\ x_{3r} \end{aligned} \tag{h}$$

Suppose X_2 is an axis of symmetry. Then, ϕ is an odd function of x_3. If we take the origin for S (point p) on the X_2 axis, $\phi_p = 0$. Also, $\bar{q}^r$ is an even function of x_3 and $x_{3r} = 0$. In what follows, we illustrate the application of the procedure to a rectangular cross section.

Example 13–6

Rectangular Section—Constant Thickness

Applying (13–73) and taking $\phi = 0$ at point ① shown in (Fig. E13–6A) leads to

$$C = \frac{2abt}{a+b}$$

①–② $$\phi = a\left(\frac{a-b}{a+b}\right)S \tag{a}$$

②–③ $$\phi = b\left(\frac{a-b}{a+b}\right)(a - S)$$

The distribution is plotted in Fig. E13–6B. Note that $\phi = 0$ when $a = b$, i.e., a square section of constant thickness does not warp.

Fig. E13–6A

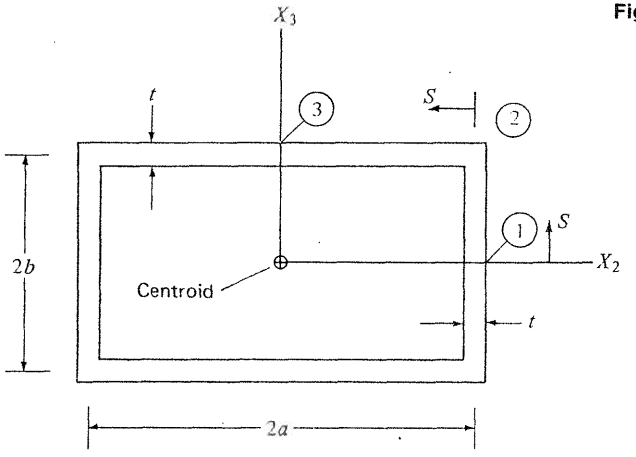

Fig. E13–6B

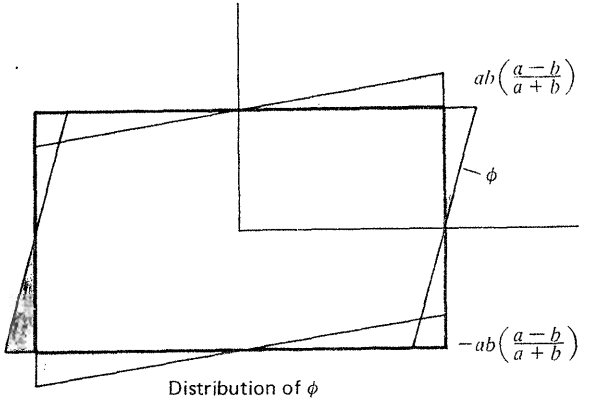

We determine Q_ϕ by integrating (a),

$$Q_\phi = at\left(\frac{a-b}{a+b}\right)\frac{S^2}{2} \qquad \text{for segment 1–2}$$

$$Q_\phi = (Q_\phi)_2 + bt\left(\frac{a-b}{a+b}\right)\left(aS - \frac{S^2}{2}\right) \qquad \text{for segment 2–3} \tag{b}$$

and evaluate q_p^{-r} with (13–75):

$$\bar{q}_p^r = -\frac{\oint Q_\phi \dfrac{dS}{t}}{\oint \dfrac{dS}{t}} = -\left(\frac{a-b}{a+b}\right)\left(\frac{abt}{6}\right)(2a+b) \tag{c}$$

The distribution of $\bar{q}^r$ follows from (b), (c),

$$\text{①–②} \qquad \bar{q}^r = D\left\{\left(\frac{S}{b}\right)^2 - \frac{1}{3}\left(1 + \frac{2a}{b}\right)\right\}$$

$$\text{②–③} \qquad \bar{q}^r = D\left\{1 + \frac{2a}{b}\left(\frac{S}{a} - \frac{1}{2}\left(\frac{S}{a}\right)^2\right) - \frac{1}{3}\left(1 + \frac{2a}{b}\right)\right\} \tag{d}$$

$$D = \frac{ab^2t}{2}\left(\frac{a-b}{a+b}\right)$$

and is plotted in Fig. E13–6C. Note that $+\bar{q}^r$ corresponds to q^r acting in the clockwise $(-S)$ direction for $+M_T^r$. Also, D is negative for $b > a$.

Fig. E13–6C

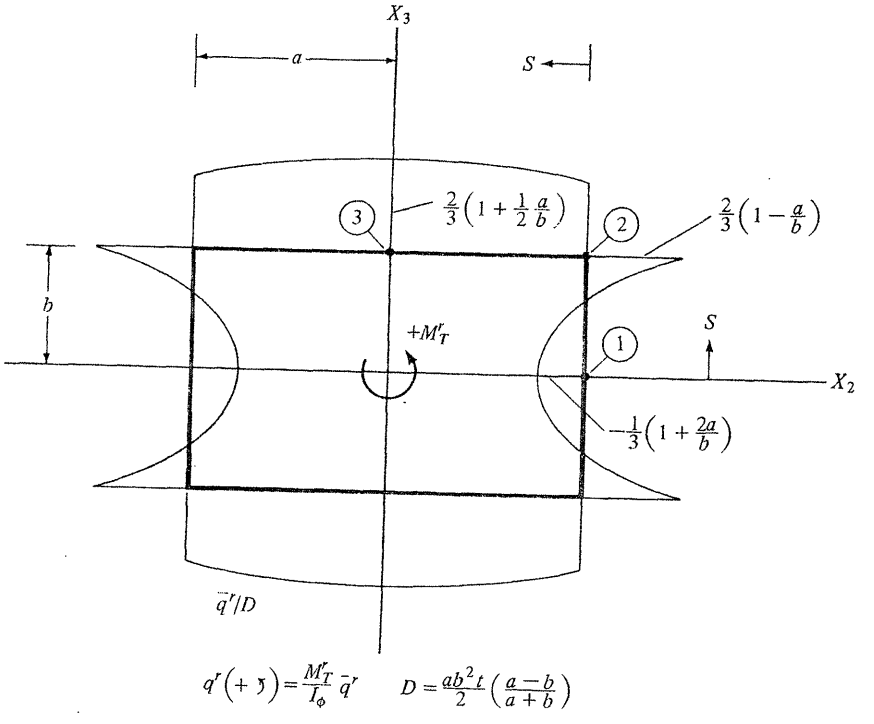

We introduce a shape factor ζ,

$$\zeta = \frac{\text{depth}}{\text{width}} = \frac{b}{a} \tag{e}$$

and express the various coefficients in terms of a, t, and ζ. The resulting relations are

$$
\begin{aligned}
J &= 16a^3t\left(\frac{\zeta^2}{1+\zeta}\right) \qquad \text{(neglecting the contribution of } J^0\text{)} \\
I_\phi &= \frac{4a^5t}{3}\left[\frac{\zeta^2(1-\zeta)^2}{1+\zeta}\right] \\
C_r &= \frac{4}{5}\,\frac{1+5\zeta+5\zeta^2+\zeta^3}{1-\zeta-\zeta^2+\zeta^3} \\
C_s &= \frac{5(1-\zeta)^2}{9\left(1+\dfrac{2\zeta}{3}+\zeta^2\right)} \\
\lambda L &= \left\{C_s\left(\frac{G}{E_r}\right)\left(\frac{12\zeta^2}{(1-\zeta)^2}\right)\right\}^{1/2}\frac{L}{b} = \zeta_\lambda\frac{L}{b} \\
x_{2r} &= x_{3r} = 0
\end{aligned}
\tag{f}
$$

The variation of C_r, C_s, and ζ_λ with b/a is shown in the table below:

$\zeta = \dfrac{b}{a}$	C_r	C_s	$\zeta_\lambda\left(\text{for } \dfrac{G}{E} = \dfrac{3}{8}\right)$
1	∞	0	0.98
2	10.43	0.0877	1.27
3	4.41	0.185	1.39

We found

$$
\begin{aligned}
C_r &= 0\left(\frac{t}{h}\right)^2 \\
C_s &= 1 + 0\left(\frac{t}{h}\right)^2 \\
\lambda L &= 0\left(\frac{t}{h}\,\frac{L}{h}\right)
\end{aligned}
\tag{g}
$$

for an open section. Our results for the single cell indicate that

$$
\begin{aligned}
\lambda L &= 0\left(\frac{L}{h}\right) \\
C_r &\gg 1 \\
C_s &\ll 1
\end{aligned}
\tag{h}
$$

for a closed section. We obtained a similar result for λL, using the displacement-model formulation for a solid section. Since C_r is due to the restrained shearing stress (q^r), we see that shear deformation due to q^r *cannot be neglected* for a closed cross section.

We discuss next the determination of the normal and shearing stresses due to warping. The general expressions are

$$
\sigma^r_{11} = \frac{M_\phi}{I_\phi}\phi \qquad \sigma^r_{1s} = \frac{q^r}{t} = -\frac{M^r_T}{tI_\phi}\overline{q}^r \tag{i}
$$

The maximum normal stress occurs at point 2 while the maximum shear stress can occur at either points 1 or 3.

We consider the same problem as was treated in Example 13–4, i.e., a member fully restrained at one end and subjected to a torsional moment M at the other end. We express the stresses in terms of σ^u_m, the maximum shear stress for unrestrained torsion,

$$
\sigma^u_m = \frac{M}{J}\left(t + \frac{C}{t}\right) \tag{j}
$$

which reduces to

$$
\sigma^u_m = \frac{M}{J}\,\frac{C}{t} = \frac{M}{2At} \tag{k}
$$

since we are considering the section to be thin-walled. The maximum stresses are

$$
\begin{aligned}
\sigma^r_{11}\big|_{\text{max at point 2}} &= \zeta_1\sigma^u_m \tanh \lambda L \\
\sigma^r_{1s}\big|_{\text{max at 1 or 3}} &= \zeta_2\sigma^u_m \\
\zeta_1 &= \left[\frac{3C_s}{G/E_r}\right]^{1/2} \\
\zeta_2 &= 8\zeta C_s\left(\frac{a^5t}{I_\phi}\right)\left(\frac{\overline{q}^r}{a^3t}\right)
\end{aligned}
\tag{l}
$$

The variation of ζ_1 and ζ_2 with height/width is shown below. We are taking Poisson's ratio equal to 1/3.

$\zeta = b/a$	ζ_1 (point 2)	ζ_2 (point 1)	ζ_2 (point 3)
1	0	0	0
2	−1.04	−0.35	+0.44
3	−1.51	−0.46	+0.65

For large λL, $\tanh \lambda L \approx 1$ and we see that both the normal and shear stress are of the order of the unrestrained-torsion stress. In the open section case, we found the restrained-torsion shear stress to be of the order of (thickness/depth) times the unrestrained shear stress.

To illustrate the procedure for a multicell section, we consider the section shown in Fig. 13–7. The unrestrained-torsion analysis for this section is treated in Sec. 11–4 (see Fig. 11–11). For convenience, we summarize the essential results here.

We number the cells consecutively and take the $+S$ sense from X_2 to X_3 for the closed segments and inward for the open segments. The total shear flow is obtained by superimposing the individual cell flows q^u_1, q^u_2.

$$
\begin{aligned}
q^u &= 0 \qquad \text{for an exterior (open) segment} \\
q^u &= \qquad \text{constant for an interior segment}
\end{aligned}
\tag{a}
$$

We let

$$
q^u_j = \frac{M^u_T}{J}C_j \tag{b}
$$

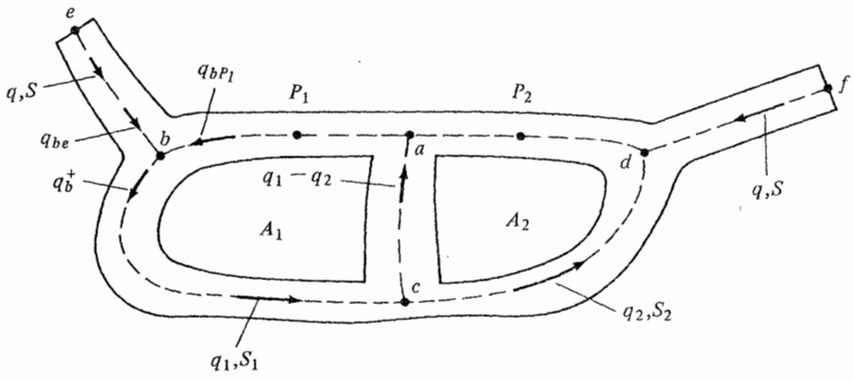

Fig. 13–7. Notation for mixed cross section.

The constants C_1, C_2 are determined by requiring each cell to have the same twist deformation, $\omega_{1,1}$. Enforcing (11–67),†

$$\oint_{S_d} \frac{q^u}{Gt}\, dS = 2\omega_{1,1} A_j = 2\frac{M_T^u}{GJ} A_j \tag{c}$$

for each cell leads to

$$\mathbf{aC} = 2\mathbf{A} \tag{d}$$

where **a**, **A** are defined as

$$\begin{aligned} a_{jj} &= \oint_{S_j} \frac{dS}{t} \\ a_{12} &= a_{21} = -\int_c^a \frac{dS}{t} \\ \mathbf{A} &= \{A_1, A_2\} \end{aligned} \tag{e}$$

The warping function is generated by applying (13–6):

$$\begin{aligned} \phi &= -\phi_t^{sc} \\ \frac{\partial}{\partial S}\phi &= \rho_{sc} - \left(\frac{J}{M_T^u}\right)\frac{q^u}{t} \end{aligned} \tag{13–76}$$

We start at point P_1 in cell 1 and integrate around the centerline, enforcing continuity of ϕ at the junction points b, c, and d. For example, at b, we require

$$\phi_b|_{P_1 b} = \phi_b|_{eb} \tag{f}$$

† See also (11–32).

which leads to a relation between ϕ_e and ϕ_{P_1}:

$$\phi_b = \phi_e + \int_e^b \rho_{sc}\, dS = \phi_{P_1} + \int_{P_1}^b \left(\rho_{sc} - \frac{C_1}{t}\right) dS \tag{g}$$

Repeating for points C and d results in the distribution of ϕ expressed in terms of ϕ_{P_1}. One can easily verify that ϕ is continuous, i.e., ϕ_a determined from segment ca is equal to ϕ_a determined from segment cda. Finally, we evaluate ϕ_{P_1} by enforcing†

$$\iint \phi\, dA = \int \phi t\, dS = 0 \tag{h}$$

where the integral extends over the total centerline. Note that $\phi_{P_1} = 0$ if P_1 is taken on an axis of symmetry.

The shear flow for restrained torsion is obtained with (13–69):

$$\frac{\partial}{\partial S}\bar{q}^r = \phi t \tag{i}$$

The steps are the same as for the flexural shear determination discussed in Sec. 11–7. We take the shear flow at points P_1, P_2 as the redundants,

$$\bar{q}^r|_{P_j} = C_j^r \qquad j = 1, 2 \tag{13–77}$$

and express the shear flow as

$$\bar{q}^r = \bar{q}_0 + \bar{q}_c \tag{13–78}$$

where $\bar{q}_0$ is the *open* section distribution and $\bar{q}_c$ is due to C_1^r, C_2^r. The distribution, $\bar{q}_c$, has the same form as $q^u/(M_T^u/J)$. We just have to replace C with C^r. We generate $\bar{q}_0$ by integrating (i) around the centerline, and enforcing equilibrium at the junction points. For example, at point b (see Fig. 13–7),

$$q_b^+ = q_{bP_1} + q_{be} \tag{j}$$

Note that $\bar{q}_0 = 0$ at points P_1, P_2, e and f.

The redundant shear flows are evaluated by requiring no energy coupling between q^u and q^r which is equivalent to requiring q^r to lead to no twist deformation, $\omega_{1,1}$. Noting (c), we can write

$$\oint_{S_j} \bar{q}^r \frac{dS}{t} = 0 \qquad j = 1, 2 \tag{13–79}$$

Finally, substituting for $\bar{q}^r$, we obtain

$$\begin{aligned} \mathbf{aC}^r &= \mathbf{B} \\ B_j &= -\oint_{S_j} \bar{q}_0 \frac{dS}{t} \end{aligned} \tag{13–80}$$

† See footnote on page 385.

Once ϕ and $\bar{q}^r$ are known, the cross-sectional properties (I, C_r, x_{2r}, x_{3r}) can be evaluated. Also we can readily generalize the above approach for an n-cell section.

13–9. GOVERNING EQUATIONS—GEOMETRICALLY NONLINEAR RESTRAINED TORSION

In this section, we establish the governing equations for geometrically nonlinear restrained torsion by applying Reissner's principle. This approach is a mixed formulation, i.e., one introduces expansions for both stresses and displacements. The linear case was treated in Sec. 13–5. To extend the formulation into the geometrically nonlinear realm is straightforward. One has only to introduce the appropriate nonlinear strain-displacement relations.

Our starting point is the stationary requirement†

$$\delta[\iiint(\boldsymbol{\sigma}^T\boldsymbol{\varepsilon} - \bar{\mathbf{b}}^T\mathbf{u} - V^*)d(\text{vol.}) - \iint\bar{\mathbf{p}}^T\mathbf{u}\, d(\text{surface area})] = 0 \qquad \text{(a)}$$

where $\boldsymbol{\sigma}$, $\mathbf{u}$, are independent variables, $\boldsymbol{\varepsilon} = \varepsilon(\mathbf{u})$, $V^* = V^*(\boldsymbol{\sigma})$, and $\bar{\mathbf{p}}$, $\bar{\mathbf{b}}$ are prescribed.

We take the displacement expansions according to (13–3) and use the strain-displacement relations for small strain and small finite rotations:‡

$$\begin{aligned}
\hat{u}_1 &= u_1 + \omega_2 x_3 - \omega_3 x_2 + f\phi \\
\hat{u}_2 &= u_{s2} - \omega_1(x_3 - \bar{x}_3) \\
\hat{u}_3 &= u_{s3} + \omega_1(x_2 - \bar{x}_2) \\
\varepsilon_1 &= \hat{u}_{1,1} + \tfrac{1}{2}(\hat{u}_{2,1}^2 + \hat{u}_{3,1}^2) \\
\gamma_{12} &= \hat{u}_{1,2} + \hat{u}_{2,1} + \hat{u}_{3,1}\hat{u}_{3,2} \\
\gamma_{13} &= \hat{u}_{1,3} + \hat{u}_{3,1} + \hat{u}_{2,1}\hat{u}_{2,3}
\end{aligned} \qquad (13\text{–}81)$$

The in-plane strain measures (ε_2, ε_3, γ_{23}) are of $0(\omega^2)$, which is negligible according to the assumption of *small finite* rotations. Actually we assume $\sigma_{22} = \sigma_{33} = \sigma_{23} = 0$, i.e., plane stress. Substituting for the displacements and noting the definition equations for the force parameters, the first term in (a) expands to

$$\begin{aligned}
\iiint\boldsymbol{\sigma}^T\boldsymbol{\varepsilon}\, d(\text{vol.}) = \int_{x_1}\{&F_1[u_{1,1} + \tfrac{1}{2}(u_{s2,1} + \bar{x}_3\omega_{1,1})^2 + \tfrac{1}{2}(u_{s3,1} - \bar{x}_2\omega_{1,1})^2] \\
&+ F_2[u_{s2,1} - \omega_3 + \omega_1(u_{s3,1} - \bar{x}_2\omega_{1,1})] \\
&+ F_3[u_{s3,1} + \omega_2 - \omega_1(u_{s2,1} + \bar{x}_3\omega_{1,1})] \\
&+ M_2[\omega_{2,1} - \omega_{1,1}(u_{s2,1} + \bar{x}_3\omega_{1,1})] \\
&+ M_3[\omega_{3,1} - \omega_{1,1}(u_{s3,1} - \bar{x}_2\omega_{1,1})] \\
&+ M_T\omega_{1,1} + M_\phi f_{,1} + M_R f \\
&+ \tfrac{1}{2}M_P\omega_{1,1}^2 + M_Q\omega_1\omega_{1,1}\}dx_1
\end{aligned} \qquad (13\text{–}82)$$

† See Eqs. 13–33 and corresponding footnote. We are working with Kirchhoff stress and Lagrangian strain here.

‡ See Sec. 10–3, Eq. 10–28. The displacement expansions assume small-finite rotation, i.e., $\sin\omega \approx \omega$ and $\cos\omega \approx 1$. To be consistent, we must use (10–28).

where the two additional force parameters are

$$\begin{aligned}
M_P &= \iint\sigma_{11}(x_2^2 + x_3^2)dA \\
M_Q &= \iint(x_2\sigma_{12} + x_3\sigma_{13})dA
\end{aligned}$$

The terms involving the external forces have the same form as for the linear case, but we list them again here for convenience (see (13–6)):

$$\iiint\mathbf{b}^T\mathbf{u}\, d(\text{vol.}) + \iint\mathbf{p}^T\mathbf{u}\, d(\text{surface area})$$
$$\Downarrow$$
$$\begin{aligned}
&\int_{x_1}(b_1u_1 + b_2u_{s2} + b_3u_{s3} + m_T\omega_1 + m_2\omega_2 + m_3\omega_3 + m_\phi f)dx_1 \\
&+ |\bar{F}_1u_1 + \bar{F}_2u_{s2} + \bar{F}_3u_{s3} + \bar{M}_T\omega_1 + \bar{M}_2\omega_2 + \bar{M}_3\omega_3 + \bar{M}_\phi f|_{x_1=0,L}
\end{aligned} \qquad (13\text{–}83)$$

where the end forces (the barred quantities) are defined as previously, for example,

$$\bar{F}_1|_{x_1=L} = (\iint p_1\, dA)_{x_1=L} \qquad \text{etc.}$$

It remains to introduce expansions for the stresses in terms of the independent force parameters and to expand V^*. In the linear case, there are 8 force measures, $F_1, \ldots, M_3$, and M_ϕ, M_R. Two additional force measures (M_P, M_Q) are present for the nonlinear case but they can be related to the previous force measures. We proceed as follows. We use the stress expansions employed for the linear case with $\phi = -\phi_i^{sc}$. They are summarized below for convenience (see Sec. 13–5):

$$\begin{aligned}
\sigma_{11} &= \frac{F_1}{A} + \frac{M_2}{I_2}x_3 - \frac{M_3}{I_3}x_2 + \frac{M_\phi}{I_\phi}\phi \\
\sigma_{1j} &= \sigma_{1j}^f + \sigma_{1j}^u + \sigma_{1j}^r \\
\sigma_{1j}^u &= f_j^u M_T^u \\
\sigma_{1j}^r &= f_j^r M_R \\
\sigma_{1j}^f &= h_{j2}F_2 + h_{j3}F_3 \\
M_T &= M_T^u + M_T^r \\
M_R &\equiv M_T^r
\end{aligned} \qquad \text{(a)}$$

where ϕ, f, g, h_2 and h_3 are functions of x_2, x_3. Introducing (a) in the definition equations for M_P and M_Q leads to

$$\begin{aligned}
M_P &= \beta_1F_1 + \beta_2M_2 + \beta_3M_3 + \beta_\phi M_\phi \\
\beta_1 &= \frac{1}{A}\iint(x_2^2 + x_3^2)dA = \frac{I_1}{A} \\
\beta_2 &= \frac{1}{I_2}\iint x_3(x_2^2 + x_3^2)dA \\
\beta_3 &= \frac{-1}{I_3}\iint x_2(x_2^2 + x_3^2)dA \\
\beta_\phi &= \frac{1}{I_\phi}\iint\phi(x_2^2 + x_3^2)dA
\end{aligned} \qquad (13\text{–}84)$$

and†

$$
\begin{aligned}
M_Q &= \eta_2 F_2 + \eta_3 F_3 + \eta_1^u M_T^u + \eta_1^r M_T^r \\
\eta_k &= \iint (x_2 h_{2k} + x_3 h_{3k}) dA \qquad (k = 2, 3) \\
\eta_2 &= -\tfrac{1}{2}\beta_3 \qquad \eta_3 = +\tfrac{1}{2}\beta_2 \\
\eta_1^{(\,)} &= \iint (x_2 f_2^{(\,)} + x_3 f_3^{(\,)}) dA
\end{aligned}
\tag{13-85}
$$

Certain coefficients vanish if the cross section has an axis of symmetry.‡ One can readily verify that

$$
\begin{aligned}
M_P &\Rightarrow \beta_1 F_1 \\
M_Q &\Rightarrow 0
\end{aligned}
\tag{13-86}
$$

when the section is doubly symmetric. For generality, we will retain all the terms here.

The complementary energy density function has the same form as for the linear case:

$$
\begin{aligned}
\bar{V}^* = {} & \frac{1}{2E}\left(\frac{F_1^2}{A} + \frac{M_2^2}{I_2} + \frac{M_3^2}{I_3}\right) + \frac{1}{2E_r}\left(\frac{M_\phi^2}{I_\phi}\right) \\
& + \frac{1}{2G}\left(\frac{F_2^2}{A_2} + \frac{2F_2F_3}{A_{23}} + \frac{F_3^2}{A_3}\right) + \frac{1}{2GJ}((M_T^u)^2 + C_r(M_T^r)^2) \\
& + \frac{M_T^r}{GJ}(x_{3r}F_2 + x_{2r}F_3)
\end{aligned}
\tag{13-87}
$$

We have shown that it is quite reasonable to neglect transverse shear deformation due to warping ($C_r = x_{2r} = x_{3r} = 0$) for a thin-walled open section.

Substituting Equations (13-82)–(13-87) in Reissner's functional and requiring it to be stationary with respect to the seven displacement and eight force measures leads to the following governing equations:

Equilibrium Equations

$$
\begin{aligned}
& F_{1,1} + b_1 = 0 \\
& \frac{d}{dx_1}\{F_1(u_{s2,1} + \bar{x}_3\omega_{1,1}) + F_2 - \omega_1 F_3 - \omega_{1,1}M_2\} + b_2 = 0 \\
& \frac{d}{dx_1}\{F_1(u_{s3,1} - \bar{x}_2\omega_{1,1}) + F_3 + \omega_1 F_2 - \omega_{1,1}M_3\} + b_3 = 0 \\
& (1 + \eta_1^u\omega_1)M_{T,1}^u + (1 + \eta_1^r\omega_1)M_{T,1}^r + m_T \\
& - F_2 u_{s3,1} + F_3 u_{s2,1} + \omega_1(-\bar{\beta}_3 F_{2,1} + \bar{\beta}_2 F_{3,1}) \\
& + \frac{d}{dx_1}\{F_1(\bar{x}_3 u_{s2,1} - \bar{x}_2 u_{s3,1} + \bar{\beta}_1\omega_{1,1}) + M_2(-u_{s2,1} + 2\bar{\beta}_2\omega_{1,1}) \\
& + M_3(-u_{s3,1} + 2\bar{\beta}_3\omega_{1,1}) + M_\phi\beta_\phi\omega_{1,1}\} = 0 \\
& M_{2,1} - F_3 + m_2 = 0 \\
& M_{3,1} + F_2 + m_3 = 0 \\
& M_{\phi,1} - M_T^r + m_\phi = 0
\end{aligned}
$$

† See Prob. 13-11.
‡ See Prob. 13-12.

where

$$
\begin{aligned}
\bar{\beta}_1 &= \beta_1 + \bar{x}_2^2 + \bar{x}_3^2 = \frac{(I_1)_{\text{shear center}}}{A} \\
\bar{\beta}_2 &= \tfrac{1}{2}\beta_2 - \bar{x}_3 \qquad \bar{\beta}_3 = \tfrac{1}{2}\beta_3 + \bar{x}_2
\end{aligned}
$$

Force-Displacement Relations

$$
\begin{aligned}
& \frac{F_1}{AE} = u_{1,1} + \tfrac{1}{2}u_{s2,1}^2 + \tfrac{1}{2}u_{s3,1}^2 + \omega_{1,1}(\bar{x}_3 u_{s2,1} - \bar{x}_2 u_{s3,1} + \tfrac{1}{2}\bar{\beta}_1\omega_{1,1}) \\
& \frac{1}{G}\left[\frac{F_2}{A_2} + \frac{F_3}{A_{23}} + \frac{x_{3r}}{J}M_T^r\right] = u_{s2,1} - \omega_3 + \omega_1[u_{s3,1} - \omega_{1,1}\bar{\beta}_3] \\
& \frac{1}{G}\left[\frac{F_2}{A_{23}} + \frac{F_3}{A_3} + \frac{x_{2r}}{J}M_T^r\right] = u_{s3,1} + \omega_2 + \omega_1[-u_{s2,1} + \omega_{1,1}\bar{\beta}_2] \\
& \frac{M_T^u}{GJ} = \omega_{1,1}(1 + \eta_1^u\omega_1) \\
& \frac{M_2}{EI_2} = \omega_{2,1} + \omega_{1,1}(-u_{s2,1} + \bar{\beta}_2\omega_{1,1}) \\
& \frac{M_3}{EI_3} = \omega_{3,1} + \omega_{1,1}(-u_{s3,1} + \bar{\beta}_3\omega_{1,1}) \\
& \frac{M_\phi}{E_r I_\phi} = f_{,1} + \tfrac{1}{2}\beta_\phi\omega_{1,1}^2 \\
& \frac{1}{GJ}[C_r M_T^r + x_{3r}F_2 + x_{2r}F_3] = f + \omega_{1,1}(1 + \eta_1^r\omega_1)
\end{aligned}
\tag{13-88}
$$

Boundary Conditions (+ for $x_1 = L$, − for $x_1 = 0$)

u_1 prescribed or $F_1 = \pm\bar{F}_1$
u_{s2} prescribed or $F_1(u_{s2,1} + \bar{x}_3\omega_{1,1}) + F_2 - \omega_1 F_3 - \omega_{1,1}M_2 = \pm\bar{F}_2$
u_{s3} prescribed or $F_1(u_{s3,1} - \bar{x}_2\omega_{1,1}) + F_3 + \omega_1 F_2 - \omega_{1,1}M_3 = \pm\bar{F}_3$
ω_1 prescribed or $F_1(\bar{x}_3 u_{s2,1} - \bar{x}_2 u_{s3,1} + \bar{\beta}_1\omega_{1,1})$
$\quad + \omega_1(\bar{\eta}_2 F_2 + \bar{\eta}_3 F_3) + (1 + \eta_1^u\omega_1)M_T^u + (1 + \eta_1^r\omega_1)M_T^r$
$\quad + M_2(-u_{s2,1} + 2\bar{\beta}_2\omega_{1,1}) + M_3(-u_{s3,1} + 2\bar{\beta}_3\omega_{1,1}) + \omega_{1,1}\beta_\phi M_\phi = \pm\bar{M}_T$
ω_2 prescribed or $M_2 = \pm\bar{M}_2$
ω_3 prescribed or $M_3 = \pm\bar{M}_3$
f prescribed or $M_\phi = \pm\bar{M}_\phi$

These equations simplify considerably when the cross section is symmetrical and transverse shear deformation is neglected.† We discuss the general solution of (13-88) in Chapter 18. The following example treats one of the simplest cases, a member subjected to an axial force and torsional moment.

† See Prob. 13-13.

Example 13–7

We consider a prismatic member (see Fig. E13–7A) having a doubly symmetric cross section, fully restrained at one end and loaded by an axial force P and torsional moment M. We are interested here in evaluating the influence of axial force on the torsional behavior. The linear solution (with no axial force) was derived in Example 13–1.

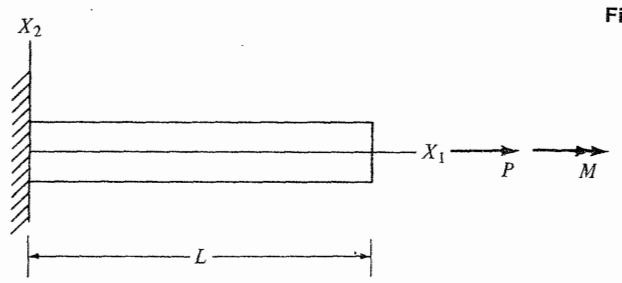

Fig. E13–7A

Equilibrium Equations (symmetrical cross section and no distributed load)

$$\begin{aligned} M_1^r &= M_{\phi,1} \\ F_{1,1} &= 0 \\ \frac{d}{dx_1}(M_1 + F_1\beta_1\omega_{1,1}) &= 0 \end{aligned} \tag{a}$$

Force-Displacement Relations

$$\begin{aligned} M_1^u &= GJ\omega_{1,1} \\ M_1^r &= \frac{GJ}{C_r}(f + \omega_{1,1}) \\ M_\phi &= E_rI_\phi f_{,1} \\ F_1 &= AEu_{1,1} + \tfrac{1}{2}EI_1\omega_{1,1}^2 \end{aligned} \tag{b}$$

Boundary Conditions

$$\begin{aligned} x_1 = 0 \quad & u_1 = \omega_1 = f = 0 \\ x_1 = L \quad F_1 = P \quad & M_\phi = 0 \quad M_1 + \beta_1F_1\omega_{1,1} = M \end{aligned} \tag{c}$$

Integrating the last two equations in (a) and noting the boundary conditions, lead to

$$\begin{aligned} F_1 &= \text{const} = P \\ M_1 + \beta_1F_1\omega_{1,1} &= \text{const} = M \end{aligned} \tag{d}$$

The first equilibrium equation takes the form

$$f_{,11} - \mu^2 f = \frac{\mu^2 M}{GJ(1 + \bar{P})} \tag{e}$$

where

$$\bar{P} = \frac{P\beta_1}{GJ} = \frac{PI_1}{GJA}$$

$$\mu^2 = \frac{GJ}{E_rI_\phi}\frac{1 + \bar{P}}{1 + C_r(1 + \bar{P})}$$

This expression reduces to Equation (g) of Sec. 13–6 when $P = 0$. Once f is known, we can determine the rotation by integrating (d), which expands to

$$\omega_{1,1}\left[GJ\left(1 + \bar{P} + \frac{1}{C_r}\right)\right] = M - \frac{GJ}{C_r}f \tag{f}$$

when we substitute for M_1 using (b).

The general solution is

$$\begin{aligned} f &= C_1\cosh\mu x + C_2\sinh\mu x - \frac{M}{GJ(1 + \bar{P})} \\ \omega_1\left[GJ\left(1 + \bar{P} + \frac{1}{C_r}\right)\right] &= C_3 + Mx\left\{1 + \frac{1}{C_r(1 + \bar{P})}\right\} - \frac{GJ}{\mu C_r}\{C_1\sinh\mu x + C_2\cosh\mu x\} \end{aligned} \tag{g}$$

(We drop the subscript on x_1 for convenience.) Finally, specializing (g) for these particular boundary conditions result in

$$\begin{aligned} f &= \frac{M}{GJ(1 + \bar{P})}\{-1 + \cosh\mu x - \tanh\mu L\sinh\mu x\} \\ \omega_1 &= \frac{M}{GJ(1 + \bar{P})}\left[x - \frac{1}{\mu}\left(\frac{1}{1 + C_r(1 + \bar{P})}\right)\{\sinh\mu x + (1 - \cosh\mu x)\tanh\mu L\}\right] \end{aligned} \tag{h}$$

These equations reduce to (13–57) when $\bar{P} = 0$.

A tensile force ($P > 0$) increases the torsional stiffness whereas a compressive force ($P < 0$) decreases the stiffness. Equation (h) shows that the limiting value of $\bar{P}$ is -1. We let P_r represent the critical axial force and σ_{cr} the corresponding axial stress

$$\begin{aligned} P_{cr} &= -\frac{GJA}{I_1} \\ \sigma_{cr} &= -\frac{GJ}{I_1} \end{aligned} \tag{i}$$

In order for σ_{cr} to be less than the yield stress, (J/I_1) must be small with respect to unity.

As an illustration, consider the section shown in Fig. E13–7B. The various coefficients (see Example 13–4) are

$$\begin{aligned} \xi &= b/h \\ I_1 &= I_2 + I_3 = \frac{th^3}{6}(\tfrac{1}{2} + 3\xi + \xi^3) \\ J &= \frac{ht^3}{3}(1 + 2\xi) \end{aligned} \tag{j}$$

Fig. E13–7B

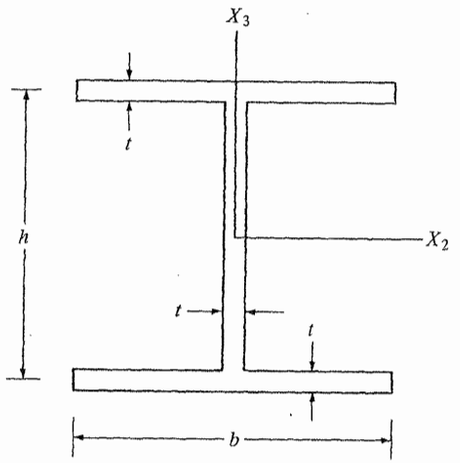

and

$$\frac{\sigma_{\alpha}}{G} = -\left(\frac{t}{h}\right)^2 \left(\frac{2 + 4\xi}{\frac{1}{2} + 3\xi + \xi^3}\right)$$

REFERENCES

1. VON KÁRMÁN, T., and N. B. CHRISTENSEN: "Methods of Analysis of Torsion with Variable Twist," *J. Aero. Sci.*, pp. 110–124, April 1944.
2. TIMOSHENKO, S. J.: "Theory of Bending, Torsion and Buckling of Thin-Walled Members of Open Cross Section," *J. Franklin Inst.*, pp. 559–609, 1945.
3. VON KARMAN, T., and W. C. CHIEN: "Torsion with Variable Twist," *J. Aero. Sci.*, Vol. 13, No. 10, pp. 503–510, October 1946.
4. BENSCOTER, S. U.: "Secondary Stresses in Thin-Walled Beams with Closed Cross Sections," NACA-TN 2529, Washington, D. C., 1951.
5. BENSCOTER, S. U.: "A Theory of Torsion Bending for Multicell Beams," *J. Appl. Mech.*, Vol 21, No. 1, 1954.
6. VLASOV, V. Z.: *Thin Walled Elastic Beams*, Israel Program for Scientific Translations, Office of Technical Services, U.S. Dept. of Commerce, Washington, D.C. 1961.
7. HEILIG, R.: "Der Schuberverformungseinfluss auf die Wölbkrafttorsion von Stüben mit offenem Profil," *Der Stahlbau*, April 1961.
8. HEILIG, R.: "Beitrag zur Theorie der Kastenträger beliebiger Querschnittsform," *Der Stahlbau*, December 1961.
9. ODEN, J. T.: *Mechanics of Elastic Structures*, McGraw-Hill, New York, 1967.
10. KOLLBRUNNER, C. F., and K. BASLER: *Torsion in Structures*, Springer-Verlag, Berlin, 1969.
11. WASHIZU, K.: *Variational Methods in Elasticity and Plasticity*, Pergamon Press, 1968.
12. MAISEL, B. I.: "Review of Literature Related to the Analysis and Design of Thin-Walled Beams," Technical Report 440, Cement and Concrete Association, London, July 1970.

13. DABROWSKI, R.: "Gekrümmte dünnwandige Träger," Springer-Verlag, Berlin, 1968.
14. GALAMBOS, T. V.: *Structural Members and Frames*, Prentice-Hall, 1968.
15. BLEICH, F.: *Buckling Strength of Metal Structures*, McGraw-Hill, New York, 1952.
16. BÜRGERMEISTER, G., and H. STEUP: *Stabilitat Theorie*, Part 1, Akademie Verlag, Berlin, 1957.
17. CHILVER, A. H.: *Thin-Walled Structures*, Chatto and Windus, London, 1967.
18. REISSER, E.: "Note on Torsion with Variable Twist," *J. Appl. Mech.*, Vol. 23, No. 2, pp. 315–316, June 1956.

PROBLEMS

13–1. The shear stress distribution due to F_2 is given by (see (11–95))

$$\sigma_{12} = \frac{F_2}{I_3}\bar{\phi}_{2r,2} \qquad \sigma_{13} = \frac{F_2}{I_3}\bar{\phi}_{2r,3}$$

where $\bar{\phi}_{2r}$ are flexural warping functions which satisfy

$$\nabla^2\bar{\phi}_{2r} = -x_2 \qquad (\text{in } A)$$
$$\frac{\partial\bar{\phi}_{2r}}{\partial n} = 0 \qquad (\text{on } S)$$

This result applies when the cross section is assumed to be rigid with respect to in-plane deformation. The coordinate of the shear center is defined by

$$x_3|_{sc} = \bar{x}_3 = -\frac{1}{I_3}\iint (x_2\bar{\phi}_{2r,3} - x_3\bar{\phi}_{2r,2})dA \qquad \text{(a)}$$

Show that (a) reduces to

$$\bar{x}_3 = \frac{1}{I_3}\iint x_2\phi_t\, dA$$

where ϕ_t is the St. Venant torsional warping function. *Hint*: See Prob. 11–11 and Equation (11–97).

13–2. Verify (13–40) and (13–44).

13–3. This problem reviews the subject of the chapter in two aspects.

(a) No coupling between the unrestrained and restrained torsional distribution requires

$$\iint(\sigma^u_{12}\sigma^r_{12} + \sigma^u_{13}\sigma^r_{13})dA = 0 \qquad \text{(a)}$$

The unrestrained torsional shear stress distribution for twist about the shear center (see Sec. 13–3, Equation (b)) is given by

$$\sigma^u_{12} = \frac{M^u_T}{J}[\phi^{sc}_{t,2} - x_3 + \bar{x}_3]$$
$$\sigma^u_{13} = \frac{M^u_T}{J}[\phi^{sc}_{t,3} + x_2 - \bar{x}_2] \qquad \text{(b)}$$

The restrained torsional shear stress distribution is determined from (13–39). Verify that $M^r_T = M_R$ when $\phi = \phi^{sc}_t$ and (a) is enforced.

(b) When the cross section is thin-walled, (a) and (b) take the form

$$\int_S q^u q^r \frac{dS}{t} = 0 \tag{c}$$

$$\frac{q^u}{t} = \sigma^u_{1s}|_{c1} = \frac{M^u_T}{J}\left(\rho_{sc} + \frac{\partial}{\partial S}\phi^{sc}_t\right) \tag{d}$$

where $|\rho_{sc}|$ is the perpendicular distance from the shear center to the tangent at the centerline. Equation (d) follows from (11–29) and Prob. 11–4. We determine q^r from (13–43). Finally, the force parameters for the thin-walled case are defined as

$$\begin{aligned} M^r_T &= \int q^r \rho_{sc}\, dS \\ M_R &= \int q^r \phi_{,s}\, dS \end{aligned} \tag{e}$$

Verify that $M^r_T = M_R$ when $\phi = -\phi^{sc}_t$. Consider the following cases:

1. Open section
2. Closed section
3. Mixed section

13–4. Specialize (13–57) for $\lambda L \gg 1$ and compare M^r vs. M^u. Also evaluate ω_1 at $x = L$ and compare with the unrestrained value.

13–5. Refer to Examples 12–2 and 13–2. Discuss how you would modify the member force-displacement relations developed in Example 12–2 to account for restrained torsion. Consider $C_s = 1$, $x_{2r} = x_{3r} = 0$, and—

(a) warping restrained at both ends
(b) warping restrained only at $x = L$

13–6. Refer to Example 13–2. Determine the translations of the shear center. Consider the cross section fixed at $x = 0$. Discuss how the solution has to be modified when the cross section at $x = L$ is restrained against translation.

13–7. Starting with the force-deformation relations based on the mixed formulation (13–49), derive the member force-displacement relations (see Example 12–2). Consider *no* warping at the end sections and take $C_\phi = +1$. Specialize for—

(a) symmetrical cross section
(b) no shear deformation due to restrained torsion and flexure—arbitrary cross section.

13–8. Consider a thin-walled section comprising discrete elements of *different* material properties (E, G). Discuss how the displacement and mixed formulations have to be modified to account for variable material properties. *Note*: The unrestrained torsion and flexural stress distributions are treated in Prob. 11–14 and 12–1.

13–9. Determine the distribution of ϕ, q^r, and expressions for I_ϕ, C_r, x_{2r}, x_{3r} for the cross sections shown in parts a and b and part c–d of the accompanying sketch (four different sets of data).

13–10. Determine ϕ and q^r for the section shown.

13–11. Using the flexural shear distributions listed in Prob. 13–1, show that

$$\eta_2 = -\tfrac{1}{2}\beta_3$$

Prob. 13–9

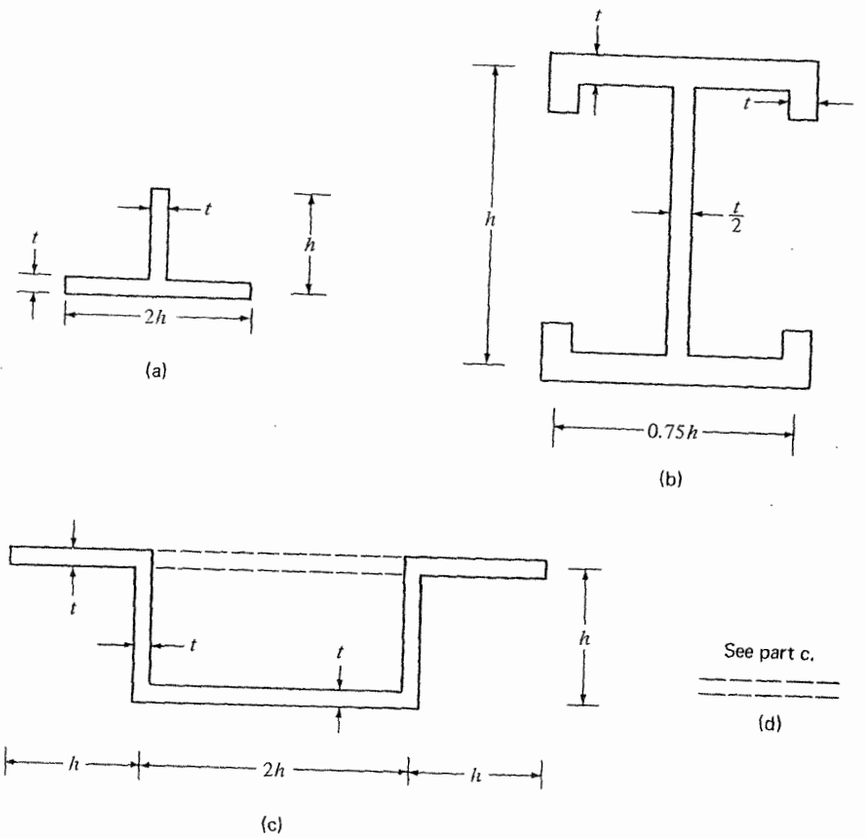

Prob. 13–10

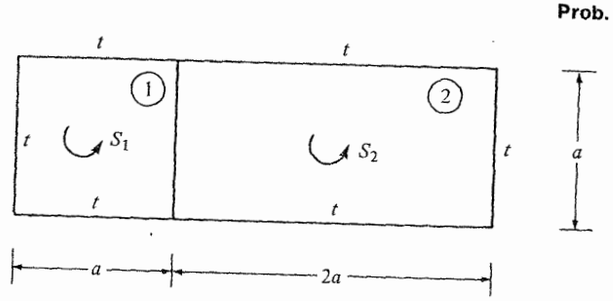

Hint: One can write

$$\beta_3 = \frac{1}{I_3}\iint (x_2^2\,\nabla^2\phi_{2r} + x_3^2\,\nabla_{2r}^2)dA$$

Also show that

$$\eta_3 = \tfrac{1}{2}\beta_2$$

13–12. Specialize Equations (13–84) and (13–85) for the case where the cross section is symmetrical with respect to the X_2 axis. Utilize

$$\iint H_e(x_2, x_3)H_o(x_2, x_3)dA = 0$$

where H_e is an even function and H_o an odd function of x_3. Evaluate the coefficients for the channel section of Example 13–5. Finally, specialize the equations for a doubly symmetric section.

13–13. Specialize (13–88) for a doubly symmetrical cross section. Then specialize further for negligible transverse shear deformation due to flexure and warping. The symmetry reductions are

$$\bar{x}_2 = \bar{x}_3 = 0 \qquad x_{2r} = x_{3r} = 0$$
$$\beta_2 = \beta_3 = \beta_\phi = 0 \qquad 1/A_{23} = 0$$
$$\eta_2 = \eta_3 = \eta_1^u = \eta_1^r = 0$$

13–14. Consider the two following problems involving doubly symmetric cross section.

(a) Establish "linearized" incremental equations by operating on (13–88) and retaining only linear terms in the displacement increments. Specialize for a doubly symmetric cross section (see Prob. 13–12).

(b) Consider the case where the cross section is doubly symmetric and the initial state is pure compression ($F_1 = -P$). Determine the critical load with respect to torsional buckling for the following boundary conditions:

1. $\omega_1 = f = 0$ at $x = 0, L$ (restrained warping)
2. $\omega_1 = \dfrac{df}{dx} = 0$ at $x = 0, L$ (unrestrained warping)

Neutral equilibrium (buckling) is defined as the existence of a *nontrivial* solution of the linearized incremental equations for the same external load. One sets

$$F_1 = -P$$
$$u_2 = u_3 = \omega_1 = \omega_2 = \omega_3 = f = 0$$

and determines the value of P for which a nontrivial solution which satisfies the boundary conditions is possible. Employ the notation introduced in Example 13–7.

13–15. Determine the form of $\bar{V}$, the strain energy density function (strain energy per unit length along the centroidal axis), expressed in terms of displacements. Assume no initial strain but allow for geometric nonlinearity. Note that $\bar{V} = \bar{V}^*$ when there is no initial strain.

14

Planar Deformation of a Planar Member

14–1. INTRODUCTION: GEOMETRICAL RELATIONS

A member is said to be planar if—

1. The centroidal axis is a plane curve.
2. The plane containing the centroidal axis also contains one of the principal inertia axes for the cross section.
3. The shear center axis coincides with or is parallel to the centroidal axis. However, the present discussion will be limited to the case where the shear center axis lies in the plane containing the centroidal axis.

We consider the centroidal axis to be defined with respect to a global reference frame having directions X_1 and X_2. This is shown in Fig. 14–1. The orthogonal unit vectors defining the orientation of the local frame (Y_1, Y_2) at a point are denoted by $\vec{t}_1, \vec{t}_2$, where $\vec{t}_1$ points in the *positive* tangent direction and $\vec{t}_1 \times \vec{t}_2 = \vec{t}_3$. Item 2 requires Y_2 to be a principal inertia axis for the cross section.

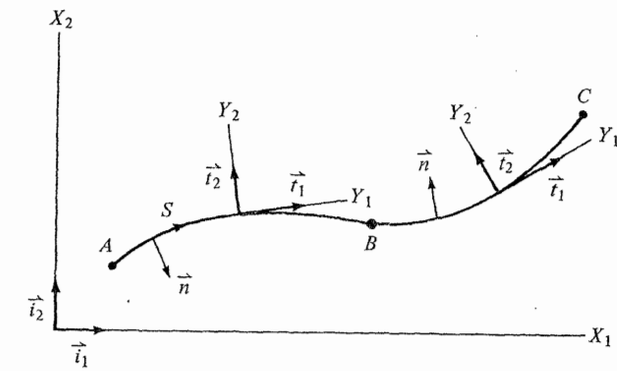

Fig. 14–1. Geometrical notation for plane curve.